STORMWATER & EROSION CONTROL REGULATIONS

for

CHRISTIAN COUNTY, MISSOURI

Originally Adopted as Chapter Nineteen of the Unified Development Codes

Amendments Adopted July 8, 2010 to be Effective August 9, 2010 and shall be henceforth known as the Stormwater & Erosion Control Regulations of Christian County, Missouri

STORMWATER & EROSION CONTROL REGULATIONS

for

CHRISTIAN COUNTY, MISSOURI

Christian County Commission

Ralph Phillips, Presiding Commissioner
Hosea Bilyeu, Western District Commissioner
Mike Robertson, Eastern District Commissioner

Christian County Planning and Zoning Commission

Christie Hirsch
Vance Jenkins
Brenda Hobbs
Matthew Aton, Vice-Chairman
Michael White, Chairman
Phil Short
Miranda Beadles, Highway Administrator
One member of the County Commission

Christian County Planning and Development Staff

Todd M. Wiesehan
Planning & Development Administrator

Valerie Carr
Senior Planner

Cathy Leming
Office Manager

Josh Bird
Code Enforcement
Environmental Inspector

Sayer Lee
Code Enforcement

STORMWATER & EROSION CONTROL REGULATIONS
CHRISTIAN COUNTY, MISSOURI

TABLE OF CONTENTS

Article 1 **General Provisions** ….…….… 1

Section 1 Scope 1

Section 2 Authority …… 1

Section 3 Interpretations …… 1

Section 4 Appeals ……..…… 1

Section 5 Stormwater Management Plan Requirements …….. 2

Section 6 Developments Exempt from a Stormwater Management Plan …… 2

Article 2 **Approvals and Permits Required** ……. 2

Section 1 Procedure ……...…… 2

Section 2 Soil Erosion and Control Permit …… 2

Section 3 National Pollutant Discharge Elimination System (NPDES) Stormwater Permit …….…… 2

Section 4 "404" Permit ……..…… 3

Section 5 Coordination with Other Jurisdictions ……...…… 3

Article 3 **Grading, Sediment and Erosion Control** ……..……..… 4

Section 1 Goals and Objectives ……..……...… 4

Section 2 General Design Guidelines …….……... 4

Section 3 Soil Erosion and Control Permits ……..…… 5

Section 4 Erosion and Sediment Control Plan …….…….. 6

Section 5 Design Standards and Criteria ……... 8

Drawing 1 Seed and Mulch Specifications ……16

Drawing 2A Sediment Basin ……..... 17

Drawing 2B Berm and Outlet Structures ……...……... 18

Drawing 3A Diversion Dike and Swale ……... 19

Drawing 3B Riprap Outlet Sediment Filter ……...20

Drawing 4A Straw Bale Dike ……... 21

Drawing 4B Silt Fence ……..….... 22

Drawing 5 Riprap Chute …….…... 23

Drawing 6 Perforated Pipe Outlet …….. 23

Drawing 7 Sod Channel <15’ and > 15” ……..... 24

Drawing 8 Outlet Erosion Protection – Culvert and Storm Sewer Outlets …… 25

Drawing 9 Curb Opening ……... 26

Article 4 Ownership and Maintenance …….…...…… 27

Section 1 Improvements on Public Road Right-of-Way ……. 27

Section 2 Improvements on Private Property ……..... 27

Article 5 Stormwater Planning and Design ……...…… 28

Section 1 Stormwater Management Goals……..... 28

Section 2 General Planning and Design Principles …….. 29

Section 3 Drainage Easements …….…… 31

Article 6 **Stormwater Runoff Calculations** …… 32

Section 1 General Guidelines …….…….…. 32

Section 2 Rational Formula ……..... 32

Drawing 10 Rainfall Intensity ……..… 34

Section 3 Hydrograph Methods ……... 35

Article 7 **Stormwater Drainage Structures** …….……... 37

Section 1 Inlets …….… 37

Drawing 11 Curb Inlet Detail ……..…… 40

Section 2 Storm Sewers ……...…… 42

Section 3 Design Standards for Culverts ……...…….. 48

Section 4 Design Standards for Bridges ……..…… 49

Section 5 Design Standards for Open Channels …….……. 50

Table I Manning's n-Values ……. 54

Table II Loss Coefficients ……. 55

Article 8 **Stormwater Detention Design** …….……. 57

Section 1 Purpose …….…… 57

Section 2 Policy ……... 57

Section 3 Methods of Analysis …… 58

Section 4 Alternatives to Dention ……..…….. 59

Section 5 Innovation in Design …… 60

Section 6 Interpretation ……..……. 60

Section 7 Design Criteria …….… 60

Article 9 Sinkholes and Karst Features …….....…… 66

Section 1 General …….…… 66

Section 2 Policy ……...…… 66

Section 3 Definitions …… 67

Section 4 Permits Required …….…. 69

Section 5 General Plan Requirements …….. 69

Section 6 Sinkhole Evaluation …….…… 69

Section 7 Flooding Considerations …….. 70

Section 8 Water Quality Considerations …….. 72

Article 10 Floodplain Development …….… 79

Section 1 Purpose …….… 79

Section 2 Policy ……...…… 79

Section 3 Definitions ……...…… 79

Section 4 Permits ……...…….. 80

Section 5 Federal Emergency Management Agency (FEMA) …… 80

Appendix A Adopted Floodplain Management Ordinance …… 82

Appendix B Adopted Illicit Discharge Management Ordinance …… 102

References …….……. 112

Order No. 7-8-10-03 Order of the Christian County Commission ……..... 114

STORMWATER and EROSION CONTROL REGULATIONS CHRISTIAN COUNTY, MISSOURI

ARTICLE 1. GENERAL PROVISIONS

Section 1. Scope

These design criteria set forth the minimum standards for design of storm drainage facilities on public right-of-way and private property in the unincorporated areas of Christian County, Missouri.

Section 2. Authority

These design criteria and standards set forth herein have been adopted by the Christian County Commission, in accordance with the procedures and authority set forth in the Christian County Zoning Regulations and the Christian County Subdivision Regulations.

Any development or grading begun after the date of passage of these criteria and standards which does not comply with the requirements set forth herein shall be deemed to be in violation of the requirements established herein; and shall be subject to the following enforcement measures and penalties:

A. Any person or entity violating any of the provisions of these Stormwater and Erosion Control Regulations, or any amendment or supplement thereto, shall be deemed guilty of a misdemeanor and, upon conviction thereof, shall be fined not more than one thousand dollars ($1000.00).

B. Each and every day during which such illegal location, erection and/or construction may be deemed a separate offense.

Section 3. Interpretations

Where any of the provisions contained herein may be unclear or ambiguous as they pertain to a particular site or situation, interpretations of the policies, criteria, and standards set forth herein shall be made in writing by the Christian County Engineer.

Such written interpretations shall be kept on file for future reference for use in similar situations, and shall be incorporated in subsequent revisions for the standards, if deemed necessary for general reference.

Section 4. Appeals

Where disagreements may arise over the interpretation of the requirements set forth herein, appeals may be made in accordance with procedures established by the Christian County Zoning Regulations, the Christian County Subdivision Regulations, or the Christian Building Regulations, as applicable.

Section 5. Stormwater Management Plan Requirements

A. General Requirements

1. The owner or operator of land development activities not exempted under Section 6 of this Article must submit a stormwater management plan.

2. The stormwater management plan shall include the specific required elements that are listed and/or described in the Christian County Stormwater and Erosion Control Regulations, as amended or provide sufficient analysis as detailed in Article 8 which demonstrates that the proposed development will not increase runoff levels beyond those deemed acceptable based on these regulations. Additional information shall be provided as necessary to allow an adequate review of the site conditions.

3. No approval for a building permit shall be issued until the required stormwater management plan is approved by the Planning Administrator in coordination with the County Engineer.

4. The developer/applicant is responsible for the review expenses of the County Engineer.

Section 6. Developments Exempt from a Stormwater Management Plan

It is acknowledged that any exemptions are reviewed by the Planning Administrator and should not be construed as an opportunity to circumvent the letter and spirit of the Christian County Stormwater and Erosion Control Regulations. It is also not the intent of Christian County Government to place undue and unreasonable hardships on individual business and property owners. A development shall be required to submit a Stormwater Management Plan unless it meets the criteria put forth in this Section.

A. Responsibilities of Exempt Developments

The exemptions listed in sub-section B shall not be construed as exempting these developments and redevelopments from onsite drainage improvements that may be required in accordance with building and construction codes, nor from compliance with any sections of Article 2, the County's Illicit Discharge ordinance, nor from providing adequate erosion prevention and sediment control measures to protect adjoining property owners and the public right-of-way.

B. Exemptions

The following developments and redevelopments are exempt from the requirements for a Soil and Erosion Control permit and for a Stormwater Management Plan:

1. Single to two-family individual residential dwellings in any given area that conform to all of the following criteria:
(a) do not alter a drainage channel; and,
(b) disturb less than one (1) acre of land; and,
(c) are not part of a larger common plan of development or sale that would disturb one (1) acre or more;
(d) do not alter the natural ground elevation by more than five (5) feet;
(e) is not located within a mapped sinkhole, or if located outside of the allowable building areas and not located within 30 feet of spring, sinkhole, wetland, or watercourse.

2. Commercial or industrial development that conform to all of the following criteria:
(a) disturbs less than one (1) acre of land; and,
(b) is not part of a larger common plan of development or sale that would disturb one (1) acre or more; or,
(c) adds less than five-thousand (5,000) square feet of impervious surface; and,
(d) does not alter the drainage channel; and,
(e) does not alter the natural ground elevation by more than five (5) feet;
(f) is not located within a mapped sinkhole, or if located outside of the allowable building areas and not located within 30 feet of spring, sinkhole, wetland, or watercourse.

3. Minor land disturbing activities such as home gardens and individual home repairs, landscaping, or maintenance work;

4. Individual utility service connections, unless such activity is carried-out in conjunction with the clearing, grading, excavating, transporting, or filling of a lot or lots for which a grading permit would otherwise be required by the regulation;

5. Installation, maintenance or repair of individual septic tank lines or drainage fields, unless such activity is carried out in conjunction with the clearing, grading, excavating, transporting, or filling of a lot or lots for which a grading permit would otherwise be required by the regulation;

6. Installation of posts or poles;

7. Farming activities;

8. Emergency work to protect life or property, and emergency repairs, provided that the land area disturbed shall be shaped and stabilized in accordance with the requirements of this regulation as soon as practicable.

ARTICLE 2. APPROVALS and PERMITS REQUIRED

Section 1. Procedure

A. With application for a Soil Erosion & Control Permit, the County shall require the developer to post a performance bond, irrevocable letter of credit, escrow agreement, lender's agreement, cash bond, cash or certified check of not less than the value of all work to be done under the Permit. An itemized construction cost estimate of each portion of the work shall be submitted with the security.

B. After approval of all drawings, specifications and security, the County shall issue a permit to the developer for the specified work.

Construction of detention/sedimentation basins shall be completed prior to any work on the site, including clearing & grubbing.

C. Upon completion of the specified construction, a final inspection will be conducted by the County Engineer. A "punch-list" of unsatisfactory items will be provided to the developer within 1 week of the final inspection. Upon satisfactorily completion of "punch-list" items and after As-Built Drawings are provided to the County, the County Engineer will issue a letter of approval to the developer along with a release of the security.

D. The developer/applicant is responsible for the review expenses of the County Engineer.

Section 2. Soil Erosion & Control Permit

Storm drainage facilities may not be constructed or altered without review and approval of the plans by the County and issuance of a Soil Erosion & Control Permit by the County for subdivisions or for commercial or other sites.

A. Soil removal from a pond or lake shall be limited to one (1) acre without a permit.

B. Soil removed or disturbed over 1 acre shall require a Soil Erosion & Control Permit.

Section 3. National Pollutant Discharge Elimination System (NPDES) Stormwater Permit

A. Provisions of the 1987 Clean Water Act require that certain stormwater discharges obtain an NPDES stormwater permit. In Missouri, these permits are administered by the Missouri Department of Natural Resources.

B. Federal rules for NPDES stormwater discharges are contained in 40 CFR Parts 122, 123, and 124 of the Code of Federal Regulations.

C. State NPDES stormwater regulations are contained in 10 CSR 20-6.200 of the Code of State Regulations.

D. Per the State and Federal regulations cited above, a Storm Water Pollution Prevention Plan (SWPPP) must be prepared for all developments disturbing 1 acre or more. A copy of this plan shall be submitted to Christian County with the application for a Soil Erosion & Control Permit. The EPA resource "Developing Your Stormwater Pollution Prevention Plan" should be used as a guide in preparing the SWPPP.

E. Additional provisions for NPDES stormwater permits for land disturbance activities and information regarding a Christian County Soil Erosion & Control Permit for land disturbance activities are contained in Article 3 of these Criteria.

Section 4. "404" Permit

A. For certain activities which involve the discharge of dredged or fill materials into the waters of the United States a Department of the Army permit may be required as set forth in Section 404 of the Clean Water Act. Rules for 404 permits are contained in 33 CFR Parts 320 through 330 of the Code of Federal Regulations.

B. Determination of applicability for Section 404 requirements are generally made by the Kansas City or Little Rock District office of the Corps of Engineers.

C. A brochure regarding the Corps of Engineers regulatory program may be obtained from the Corps offices.

Section 5. Coordination With Other Jurisdictions

A. Where proposed storm drainage facilities are located on property adjoining to other local government jurisdictions design of storm drainage facilities shall include provisions to receive or discharge storm water in accordance with the requirements of the adjoining jurisdiction, in addition to meeting County requirements

B. In these cases 2 additional sets of plans shall be submitted and will be forwarded to the adjoining jurisdiction for review and comment.

C. No grading or construction of storm drainage facilities may commence without prior notification of the Missouri One Call utility warning system at 1-800-DIG-RITE, as required by law.

ARTICLE 3. GRADING, SEDIMENT & EROSION CONTROL

Section 1. Goals & Objectives

The goal of this article is to effectively minimize erosion and discharge of sediment by application of relatively simple and cost effective Best Management Practices.

A. This goal can be attained by meeting the following objectives:

1. Minimize the area disturbed by construction at any given time.
2. Stabilize disturbed areas as soon as possible by re-establishing sod, other forms of landscaping, and completing proposed structures, pavements and storm drainage systems.
3. Provide for containment of sediment until areas are stabilized.
4. Provide permanent erosion controls.

Section 2. General Design Guidelines

The following items must be considered in preparing a sediment and erosion control plan:

A. Temporary vs. Permanent Controls

The greatest potential for soil erosion occurs during construction. Temporary controls are those that are provided for the purpose of controlling erosion and containing sediment until construction is complete.

Temporary controls include straw or hay bale dikes, silt fences, erosion control blankets etc., which are not needed after the area is stabilized.

Permanent controls consist of riprap, concrete trickle channels, sedimentation/detention basins, etc., which will remain in place through the life of the development.

It is possible for the same facility to serve both a temporary and permanent purpose. The difference between temporary and permanent erosion control should be clearly recognized in preparing a sediment and erosion control plan.

B. Sheet Flow vs. Concentrated Flow

In areas where runoff occurs primarily as sheet flow, containment of sediment is relatively simple. In these areas straw or hay bales, silt fences and vegetative filter areas can be very effective.

Where concentrations of flow occur containment of sediment becomes more difficult as the rate and volume of flow increase. In these areas more sophisticated controls such as sedimentation basins must be provided.

C. Slope

Control of erosion becomes progressively more difficult as the slope of the ground increases. Areas with steeply sloping topography, and cut and fill slopes must be given special consideration.

D. Soils and Geologic Setting

Area soils and the geologic setting must be considered in preparing the plan and any special considerations deemed necessary for a particular site provided.

E. Environmentally Sensitive Areas

Where construction occurs within the vicinity of permanent streams, springs, sinkholes, lakes or wetlands, special attention must be given to preventing discharge of sediment.

Section 3. Soil Erosion & Control Permits

A. Permit Exceptions

Soil Erosion & Control permits are required for all construction sites with the following exceptions:

1. Grading for single family or duplex residences constructed in subdivisions where approved sediment and erosion controls have been constructed.
2. Emergency construction required repairing or replacing roads, utilities, or other items affecting the general safety and well being of the public.

   For emergency construction sites which would otherwise be required to obtain a permit, and for which remedial construction will take more than 14 calendar days, application for the permit must be made within 3 calendar days from the start of construction.
3. The following activities, provided that they are not located within 30 feet of a spring, sinkhole, wetland, or watercourse:
   a. Gardening or landscaping normally associated with single-family residences that cover less than 1/2 acres.
   b. Grading and repair of existing roads or driveways.
   c. Cleaning and routine maintenance of roadside ditches or utilities.
   d. Utility construction where the actual trench width is 2 feet or less.

B. Permit Procedure

An approved grading, sediment and erosion control plan must be received prior to issuance of a Soil Erosion & Control Permit:

The submittal and approval procedure is as follows for Subdivisions, Commercial and Other Sites.

The sediment and erosion control plan shall be submitted for review along with the plans for the proposed improvements.

Permits for commercial, multi-family or major subdivisions will be issued by the County after the project plans have been approved.

Section 4. Erosion & Sediment Control Plan

A. Professional Qualifications

Sediment and Erosion Control Plans must be prepared by and bear the seal of an engineer, land surveyor, architect, landscape architect or geologist registered to practice in the State of Missouri or by a Certified Professional in Erosion and Sediment Control (CPESC) who has attained certification by the Soil & Water Conservation Society

B. Plan Requirements

The sediment & erosion control plan must be drawn to scale and must include the following items:

1. Location map at a scale of 1” = 2000’.
2. Legal description of the property.
3. North arrow and scale.
4. One-Call utility notification symbol.
5. Title block.
6. Signature block for licensed professional.
7. Design professional’s seal.
8. Existing topographic contours at five feet (5’) maximum intervals.

   NOTE: Contours can not be interpolated from U.S.G.S. maps. Each fifth (5th) contour (index contour) shall be labeled and shown in heavier line weight. Index contours must be labeled in a sufficient number of locations to allow the pan to be followed. Labels for existing and finish grade contour shall be distinguished by use of different symbols or fonts.
9. Proposed grades.
10. Existing and proposed utilities.
11. Existing ground covering (open areas, tree masses, etc.)
12. Existing buildings, drives and pavements.
13. Proposed buildings or other structures, drives and pavements.

14. Limits of area to be disturbed (shading preferred).

15. Location of erosion and sediment controls.

16. Details of non-standard erosion and sediment controls.

17. Seeding & mulching requirements.

18. Total site area, total disturbed area.

19. Location of stockpile areas, staging area, etc.

20. Location of temporary construction entrance.

C. Plan Exceptions

Plans will not be required in the following cases:

1. Grading associated solely with a single-family residence
2. Grading or filling of less than 1 acre if located outside of the allowable building areas and not located within 30 feet of spring, sinkhole, wetland, or watercourse.

These instances a grading permit can be issued, providing an inspection of the site by a representative of the County does not reveal conditions that would warrant preparation of a detailed plan.

D. Other Permits

1. **NPDES Stormwater Permit**

Construction sites where the area to be disturbed is 1 acre or more must apply for a stormwater discharge permit from the Missouri Department of Natural Resources.

Permit requirements are set forth in 10 CSR 20-6.200 of the Missouri Clean Water Laws.

A Stormwater Pollution Prevention Plan (SWPPP) must be prepared in accordance with Missouri Clean Water Laws. A copy of the SWPPP must be submitted with the application for a Soil Erosion & Control Permit.

2. **"404" Permit**

Grading activities in streams or wetlands may require a Department of the Army Permit under Section 404 of the Clean Water Act.

Section 5. Design Standards & Criteria

The Best Management Practices (BMPs) detailed in this section are intended to aid the development of an effective Stormwater Management Plan. More detailed guidance on acceptable BMPs can be found in the publication – *Christian County Erosion Prevention and Sediment Control Guidelines Manual*.

A. Grading

1. **Maximum Grades**

   Cut or fill slopes shall not exceed 4:1.

2. **Maximum Height**

   Cut or fill slopes shall not exceed 15 feet in vertical height unless a horizontal bench area at least 5 feet in width is provided for each 15 feet in vertical height.

3. **Minimum Slope**

   Slope in grassed areas shall not be less than 1%.

4. **Construction Specifications**

   Construction for streets must comply with specifications set forth in the Christian County Road and Access Standards.

   For all other areas, construction specifications stating requirements for stripping, materials, subgrade compaction, placement of fills, moisture and density control, preparation and maintenance of subgrade must be included or referenced on the plans, or accompanying specifications submitted.

5. **Spoil areas**

   Broken concrete, asphalt and other spoil materials may not be buried in fills within proposed building or pavement areas.

   Outside of proposed building and pavement areas, broken concrete or stone may be buried in fills, provided it is covered by a minimum of 2 feet of earth.

   Burying of other materials in fills is prohibited.

6. **Stockpile Areas**

   Location of proposed stockpile areas shall be outlined on the plans, and specifications for proper drainage included.

7. **Borrow Areas**

   The proposed limits of temporary borrow areas shall be outlined in the plans and a proposed operating plan described on the grading plan.

Temporary slopes in borrow areas may exceed the maximums set forth above. At the time that borrow operations are completed, the area shall be graded in accordance with the criteria set forth above, and reseeded.

B. Sediment Containment

1. **Existing Vegetative Filter Area**

Existing vegetative filter areas may be used where:

a. unconcentrated sheet flow occurs,

b. an area of existing vegetation a minimum of 30 feet in width can be maintained between the area to be graded and a property line, watercourse, sinkhole, spring, wetland or classified lake,

c. existing ground slope is no greater than 5:1 (20%),

d. the existing vegetative growth is of sufficient density and in sufficiently good condition to provide for filtration of sediment.

Vegetative filter areas are a temporary and permanent practice.

2. **Hay/Straw Bale Dike, or Silt Fence**

Containment areas constructed of hay or straw bales, or silt fence may be provided in areas where:

a. unconcentrated sheet flow occurs,

b. an area of existing vegetation a minimum of 25 feet in width cannot be maintained between the area to be graded and a property line, watercourse, sinkhole, spring, wetland or classified lake,

c. existing ground slope is no greater than 5:1 (20%),

d. concentrated flow from an area no greater than 1 acre occurs and a minimum volume of 1000 cubic feet per acre is contained behind the dike. Either cereal grain straw or hay may be used for bale dikes. Straw/hay bale dikes shall be constructed as shown in Drawing 4.

Straw/hale bale dikes and silt fences are temporary practices.

3. **Temporary Containment Berms**

Temporary containment berms may be provided for areas where concentrated flow from areas greater than 1 acre and less than 5 acres occurs. Temporary containment berms must contain a volume of 1000 cubic feet per acre of drainage area.

Temporary containment berms shall have a riprap outlet with a sediment filter as shown in Drawing 3, or a perforated pipe outlet as shown in Drawing 6.

Details for temporary containment berms are shown in Drawing 2.

Temporary containment berms and accumulated sediment may be completely removed after the tributary area is stabilized, and must be removed prior to final acceptance and release of escrow.

4. **Permanent Sedimentation/Water Quality Basin**

Permanent sediment/water quality basins shall be provided for all areas where concentrated flow occurs from an area of 5 or more acres or where 2 or more acres are stripped of vegetation. Sediment basins shall be designed to detain 125% of the runoff from 1" of rainfall from the development, for a period of between 24 and 48 hours. Runoff shall be calculated using the methods contained in Chapter 2 of TR-55 (Reference 11), using the recommended curve number for newly graded areas from Table 2-2a.

a. Sediment basins shall be provided with an outflow structure consisting of:

1. a flow restriction device which provides for the required detention time,

2. an outfall pipe sized to carry the maximum estimated outflow rate,

3. protective structures at the pipe outlet to prevent crushing or damage of the end of the pipe,

4. protective structures to prevent blockage of the pipe with debris,

5. erosion protection at the pipe outlet.

6. a typical outlet structure is shown in Drawing 2.

7. An overflow spillway capable of discharging the peak flow rate for the 4% annual probability (25-year) storm while maintaining a minimum freeboard of 1 foot.

   Overflow spillways may be sodded where the depth of flow at the crest is limited to no greater than 6" and outlet channel velocities do not exceed 5 feet per second for the minor (25-year) storm.

   Overflow spillways not meeting these restrictions must be constructed of riprap, concrete or other approved, non-erodible material.

C. Erosion Protection

1. Seeding and Mulching

a. Permanent Seeding

Permanent seeding fertilizer and mulch shall be applied at the rates set forth in Drawing 1 or according to other specifications, which are approved with the Grading Permit.

Permanent seeding seasons are from March 1 to May 15, and August 15 to October 15.

b. Mulching

Where slopes are less than 4:1, cereal grain mulch is required at the rate of 100 pounds per 1000 square feet (4500 pounds per acre). Cereal grain mulch shall meet the requirements of Section 802 of the State Specifications (Reference 17) for Type 1 mulch.

Where slopes are 4:1 or greater Type 3 mulch ("hydromulch") meeting the requirements of Section 802 of the State Specifications (Reference 17) shall be used.

c. Temporary Seeding

Whenever grading operations are suspended for more than 30 calendar days between permanent grass or seeding periods, all disturbed areas must be reseeded with temporary cover according to Drawing 1.

Temporary seeding season runs from May 15 to November 15.

d. Overseeding

During the winter season (November 15 to March 1) temporary seed and mulch shall be placed on all completed areas or areas where grading is suspended for more than 30 calendar days. During this period seed, mulch, and soil amendments shall be applied at the following rates:

Lime: 100% of specified quantity.*
Fertilizer: 75% of specified quantity.
Seed: 50% of specified quantity.
Mulch: 100% of specified quantity.

* Per Drawing 1.

Areas seeded during this period shall be reseeded and mulched during the next permanent seeding season according to seeding requirements.

e. **Maintenance**

Seeded areas must be maintained for one year following permanent seeding.

2. **Cut and Fill Slopes**

Cut and fill slopes shall be protected from erosion by construction of straw bale dikes, silt fences, diversion berms, or swales along the top of the slope.

Where drainage must be carried down the slopes, pipe drains, concrete flumes, riprap chutes, or other impervious areas must be provided. Suitable erosion control measures such as riprap stilling basins, must be provided at the bottom of the slope.

Diversions shall be maintained until permanent growth is firmly established on the slopes.

Typical diversion details are shown in Drawing 3.

Riprap chute details are shown in Drawing 5.

3. **Channels and Swales**

Permanent channels and swales shall be provided with a stabilized invert consisting of one of the following materials:

a. **Sod**

Where the average velocity of flow is 5 feet per second or less and there is no base flow, the channel shall be lined with sod.

For channels with a bottom width less than 15 feet, sod shall extend up the side slope to a minimum height of 6" above the toe. (Drawing 7).

Channels with a bottom width of 15 feet or greater, shall be graded as shown in Drawing 7 and contain a low flow area, 15 feet in width lined with sod.

The remainder of the channel slopes shall be seeded and mulched as provided above.

4. **Erosion Control Blanket**

Commercial erosion control blankets may be used in lieu of sod provided that samples are submitted and approved by the County. The guaranteed maintenance period shall be one year.

5. **Non-Erosive Lining**

In grass channels where base flow occurs, a non-erosive low-flow channel of riprap or concrete must be provided. Low flow channels shall have a minimum capacity of 5 cubic feet per second. Other suitable non-erosive materials may be specified with approval of the County.

For channels which have an average velocity of 5 feet per second or greater a non-erosive lining of riprap concrete or other approved material must be provided.

6. **Storm Sewer and Culvert Outlets**

Erosion protection shall be provided at storm sewer and culvert outlets. Minimum erosion protection shall consist of a concrete toe wall and non-erosive lining, meeting the County's specifications.

The required length of non-erosive lining will not be decreased where flared end sections or headwalls are provided unless calculations and data to support the decrease in length are submitted and approved.

Non-erosive lining shall consist of riprap, unless otherwise specified and approved. Field stone, gabions, or Riprap shall extend to the point at which average channel velocity for the peak flow rate from the minor (5-year) storm has decreased to 5 feet per second maximum.

The length of riprap to be provided shall be as follows: (See Drawing 8.)

Average outlet velocity less than 5 feet per second:

L = 3 times the pipe diameter or culvert width.

Average outlet velocity less than 5-10 feet per second:

L = length determined using Drawing 8.

Average outlet velocity greater than 10 feet per second:

Use MoDOT standard energy dissipater headwall. (Reference 17.)

The height of erosion protection shall be as shown in Drawing 8.

Minimum toe wall dimensions are shown in Drawing 8. Where headwalls or flared end sections are specified, toe walls must be provided at the downstream end.

7. **Curb Openings**

Where drainage has been approved by the County to flow from paved areas to grass areas through curb openings erosion protection shall be provided as shown in Drawing 9.

8. **Ditch Checks & Drop Structures**

In grass channels grades and velocities may be controlled by use of ditch checks and drop structures.

Riprap ditch checks may be required in natural channels where average velocity for the peak flow rate from the 5-year storm exceeds 5 feet per second for post-development conditions.

9. **Spillways**

Erosion protection must be provided at spillways and outlet structures for detention ponds. Erosion protection shall extend to the point where flow has stabilized and average velocity in the outlet channel is 5 feet per second or less.

10. **Temporary Construction Entrance**

A minimum of one temporary construction entrance is required at each site. Additional temporary entrances may be provided if approved. The location of each construction entrance shall be shown on the plan.

Only construction entrances designated on the sediment and erosion control plan may be used. Barricades shall be maintained if necessary to prevent access at other points until construction is complete.

Construction entrances shall be constructed of crushed limestone meeting the following specifications:

Construction entrances shall be a minimum of 25 feet wide and 50 feet long.

Minimum thickness of crushed limestone surface shall be 6". Additional 2" lifts of crushed limestone shall be added at the discretion of the County if the surface of the initial drive deteriorates or becomes too muddy to be effective.

In locations where an existing drive or street extends at least 50 feet into the site, the existing drive may be designated as the construction entrance, and construction of

a new gravel entrance is not required, unless job conditions warrant as set forth in the preceding paragraph.

11. **Cleaning Streets**

Streets both interior and adjacent to the site shall be completely cleaned of sediment at the end of construction and prior to release of security.

12. **Dust Control**

The contractor will be required to use water trucks to water all roads and construction areas to minimize dust leaving the site when conditions warrant.

13. **Sequencing and Scheduling**

Costs of sediment and erosion control can be minimized if proper consideration is given to sequencing and scheduling construction.

Any special sequencing and scheduling considerations should be noted in the grading plan.

Drawing 1 - Seed & Mulch Specifications

SEEDING RATES	BROADCAST	DRILLED SODDED
Tall Fescue	30 lbs/ac.	25 lbs/ac. solid
Kentucky Bluegrass	3 lbs/ac.	2 lbs/ac. solid
Red Fescue	10 lbs/ac.	7 lbs/ac.
Wheat or Rye	120 lbs/ac.	100 lbs/ac.
Annual Ryegrass	100 lbs/ac.	100 lbs/ac.

SEEDING DATES:

PERENNIAL GRASSES March 1 to May 15 or August 15 to October 15

TEMPORARY COVER May 15 to November 15

OVERSEEDING November 15 to March 1

MULCH RATES

Wheat Straw 100 lbs per 1000 square feet (4,500 lbs/ac)

FERTILIZER RATES

Nitrogen	90 lbs/ac.
Phosphate	90 lbs/ac.
Potassium	90 lbs/ac.
Lime	1500 lbs/ac. ENM*

ENM – effective neutralizing material as per State evaluation of quarried rock.

Drawing 2A - Sediment Basin

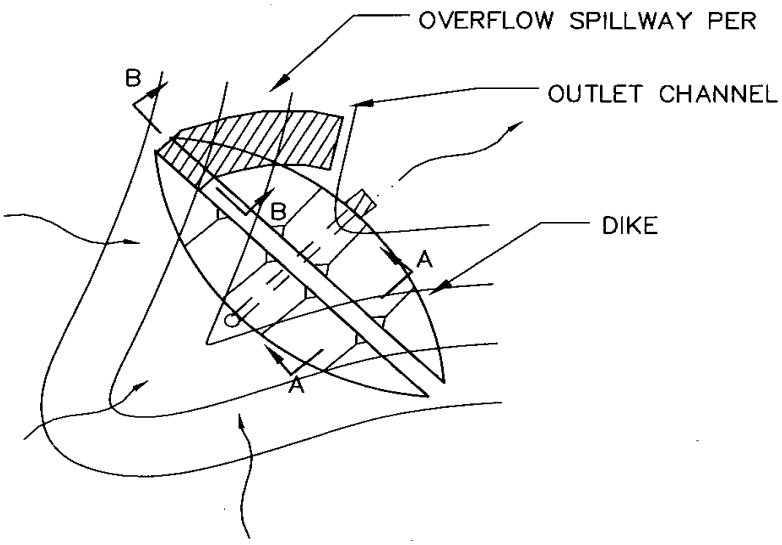

TYPICAL COMPONENTS OF SEDIMENT BASIN PLAN

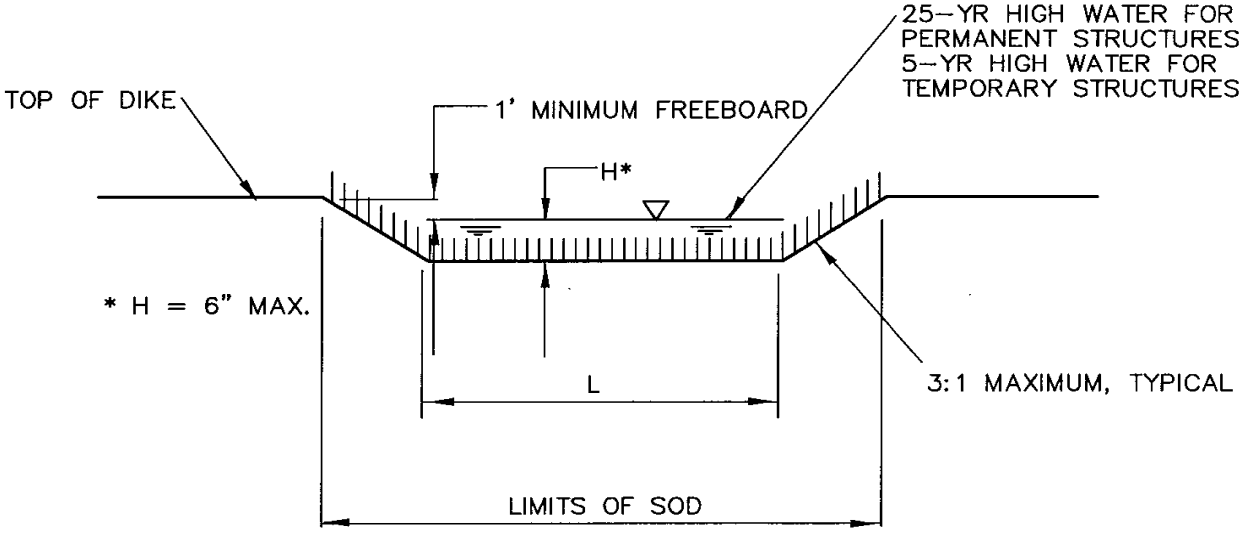

TYPICAL CROSS–SECTION – SODDED OVERFLOW
SECTION B – B

Drawing 2B - Berm & Outlet Structures

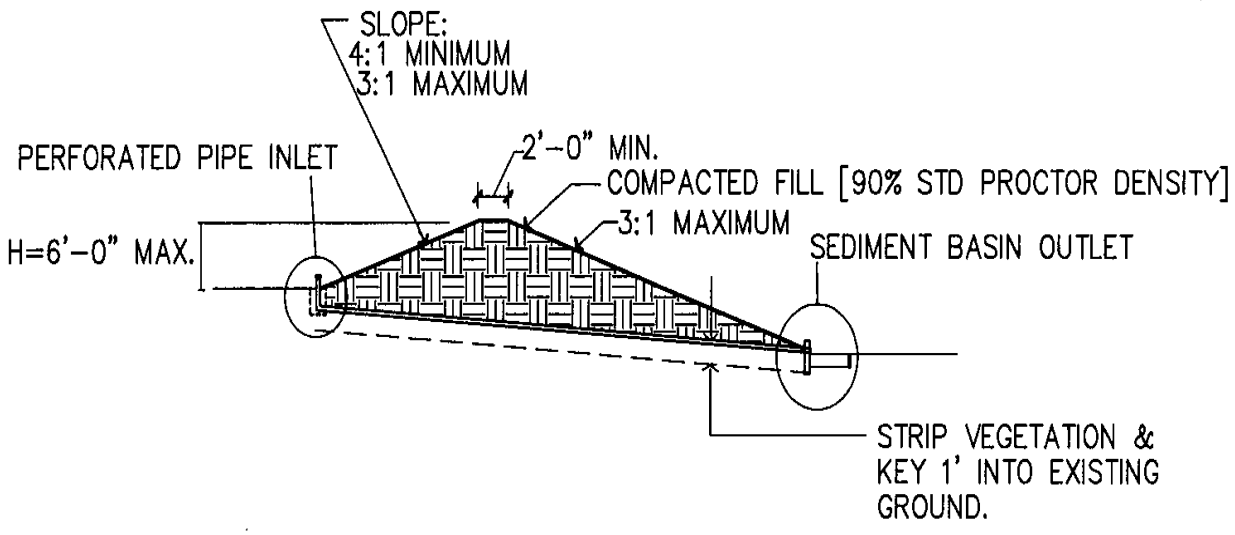

SECTION A – A

Drawing 3A - Diversion Dike & Swale

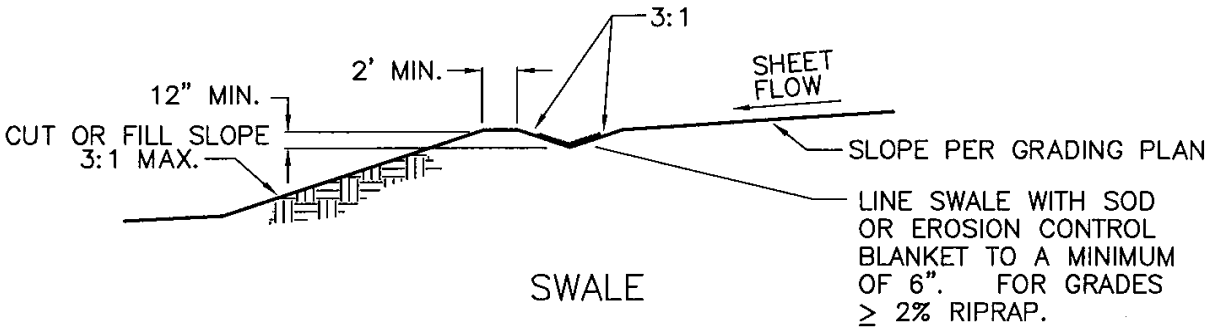

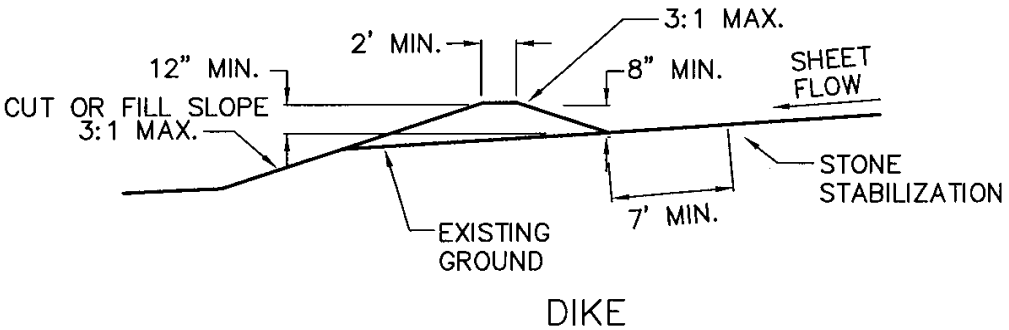

NOTES:

1. DIKE SHALL BE COMPACTED TO DENSITY EQUAL TO THAT SPECIFIED FOR ADJOINING AREA (90% STANDARD PROCTOR DENSITY, MINIMUM).
2. MINIMUM 1% GRADE MUST BE PROVIDED FOR SWALE OR ALONG UP SLOPE SIDE OF DIKE FOR PROPER DRAINAGE.

REFERENCE: ADAPTED FROM CITY OF AUSTIN & CITY OF TULSA EROSION AND SEDIMENTATION CONTROL MANUALS

Drawing 3B - Riprap Outlet Sediment Filter

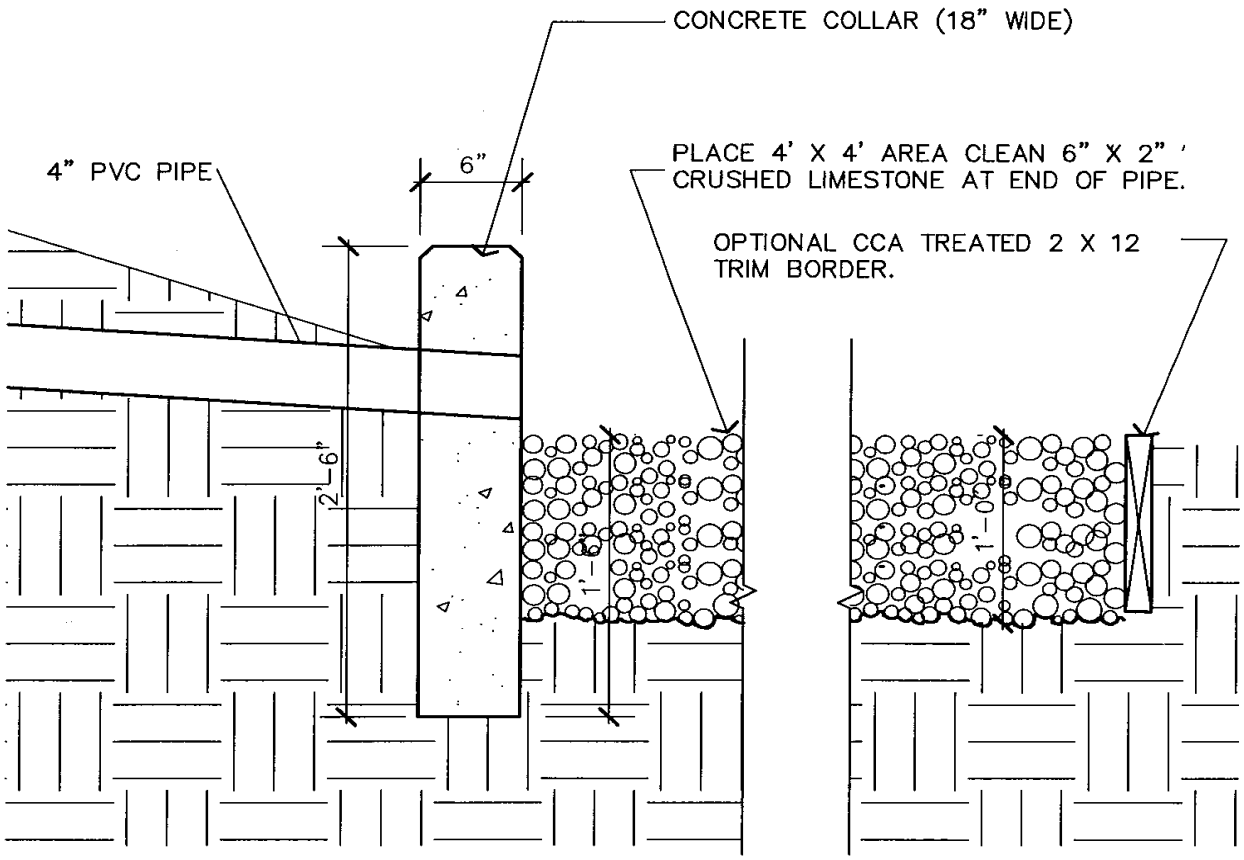

Drawing 4A - Straw Bale Dike

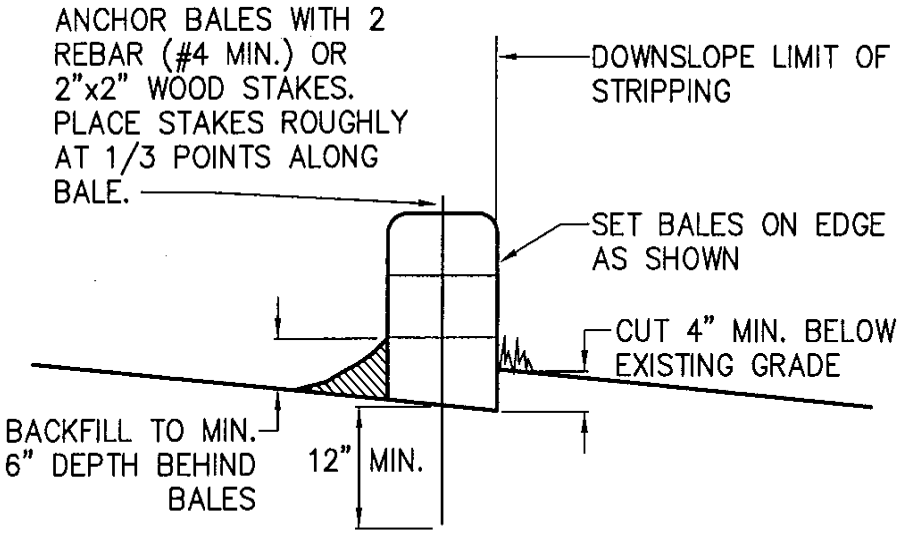

NOTES:

1. BALES SHALL BE PLACED IN A ROW WITH ENDS TIGHTLY ABUTTING THE ADJACENT BALES.
2. EACH BALE SHALL BE EMBEDDED IN THE SOIL A MINIMUM OF FOUR INCHES, WHERE POSSIBLE.
3. BALES SHALL BE SECURELY ANCHORED IN PLACE BY STAKES OR RE-BARS DRIVEN THROUGH THE BALES. THE FIRST STAKE IN EACH BALE SHALL BE ANGLED TOWARD PREVIOUSLY LAID BALE TO FORCE BALES TOGETHER.
4. INSPECTION SHALL BE FREQUENT AND REPAIR OR REPLACEMENT SHALL BE MADE PROMPTLY AS NEEDED BY CONTRACTOR.
5. BALES SHALL BE REMOVED WHEN THEY HAVE SERVED THEIR USEFULNESS SO AS NOT TO BLOCK OR IMPEDE STORM FLOW OR DRAINAGE.
6. ACCUMULATED SILT SHALL BE REMOVED WHEN IT REACHES A DEPTH OF 6 INCHES.
7. AT EACH END OF DIKE, TURN DIKE UPSLOPE AND EXTEND UNTIL GROUND SURFACE RISES 18".

REFERENCE: ADAPTED FROM CITY OF AUSTIN & CITY OF TULSA EROSION AND SEDIMENTATION CONTROL MANUALS

Drawing 4B - Silt Fence

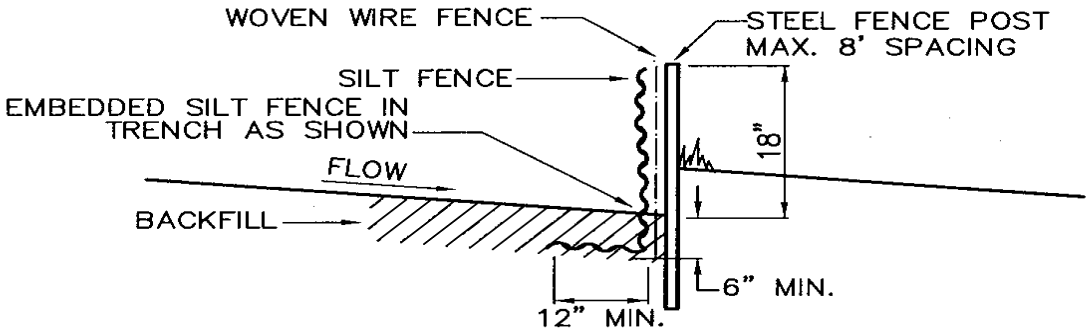

NOTES:

1. PLACE SILT FENCE AT DOWNSLOPE LIMIT OF AREA TO BE GRADED.
2. SILT FENCE SHOULD BE SECURELY FASTENED TO EACH STEEL SUPPORT POST OR TO WOVEN WIRE, WHICH IS IN TURN ATTACHED TO THE STEEL FENCE POSTS.
3. INSPECTION SHALL BE FREQUENT AND REPAIR OR REPLACEMENT SHALL BE MADE PROMPTLY AS NEEDED.
4. SILT FENCE SHALL BE REMOVED WHEN IT HAS SERVED ITS USEFULNESS, SO AS NOT TO BLOCK OR IMPEDE STORM FLOW OR DRAINAGE.
5. SEDIMENT TRAPPED BY THIS PRACTICE SHALL BE DISPOSED OF IN AN APPROVED SITE IN A MANNER THAT WILL NOT CONTRIBUTE TO ADDITIONAL SILTATION.
6. ACCUMULATED SILT SHALL BE REMOVED WHEN IT REACHES A DEPTH OF 6 INCHES AND DISPOSED OF IN AN APPROVED SPOIL SITE OR AS IN NO. 5 ABOVE.
7. AT EACH END OF SILT FENCE, TURN FENCE UPSLOPE AND EXTEND UNTIL GROUND SURFACE RISES 18".

REFERENCE: ADAPTED FROM CITY OF AUSTIN & CITY OF TULSA EROSION AND SEDIMENTATION CONTROL MANUALS

Drawing 5 - Riprap Chute

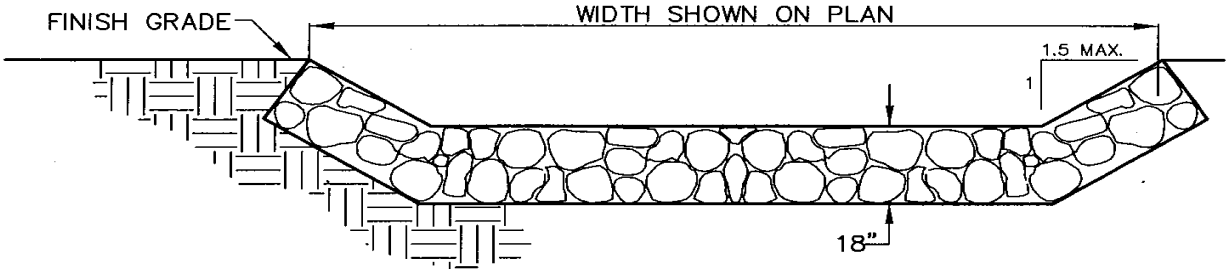

RIPRAP STONE SHALL BE GRADED AS FOLLOWS:

WEIGHT OF STONE (LBS.)	APPROXIMATE SIZE (LEAST DIMENSION)	% SMALLER BY WEIGHT
300	15.0"	100
200	13.0"	60–90
100	10.5"	30–50
50	8.5"	10–20
10	6.0"	<5

Drawing 6 - Perforated Pipe Outlet

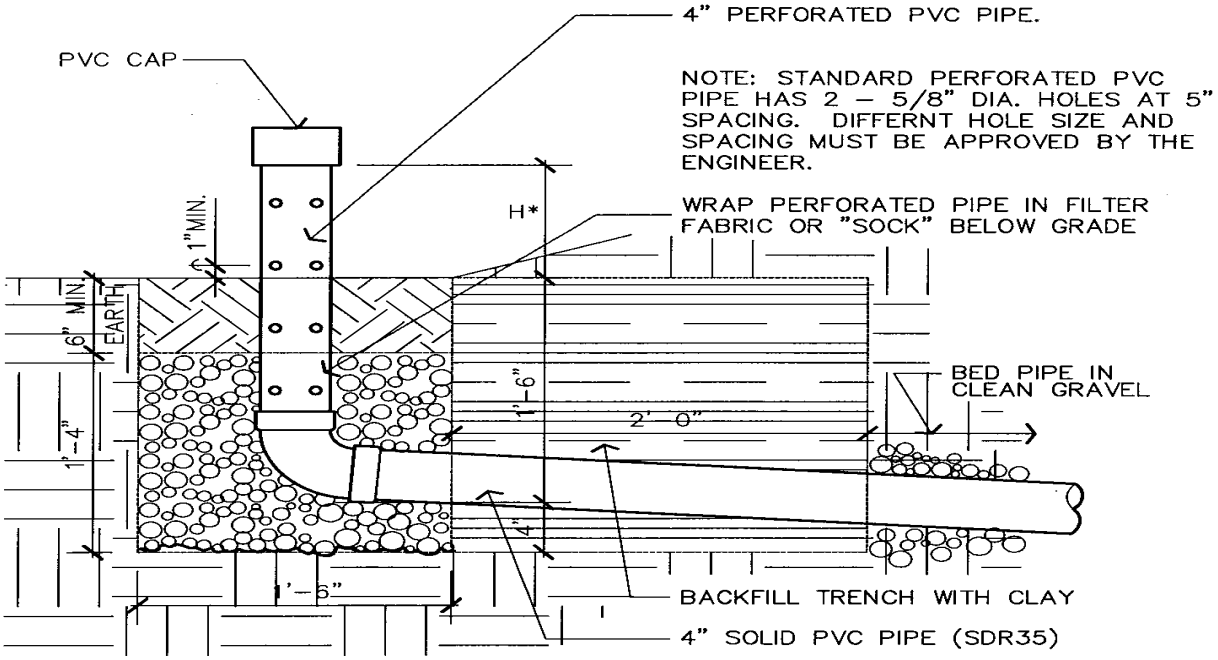

NOTE: PERFORATED RISER HEIGHT, H, TO BE SPECIFIED.

Drawing 7 - Sod Channel <15' & >15"

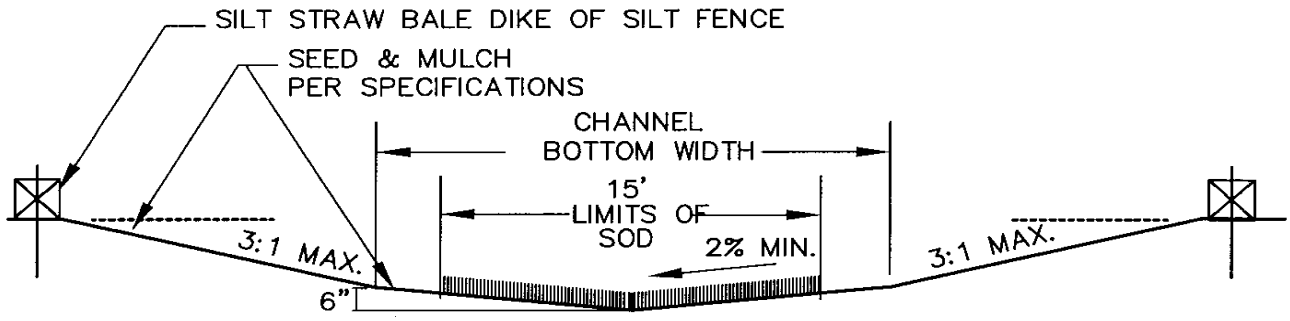

BOTTOM WIDTH > 15 FEET

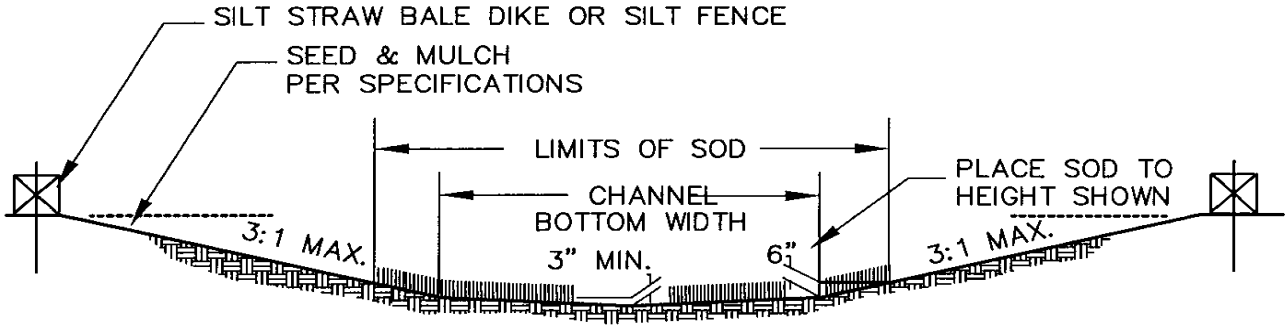

BOTTOM WIDTH < 15 FEET

Drawing 8 - Outlet Erosion Protection
Culvert & Storm Sewer Outlets

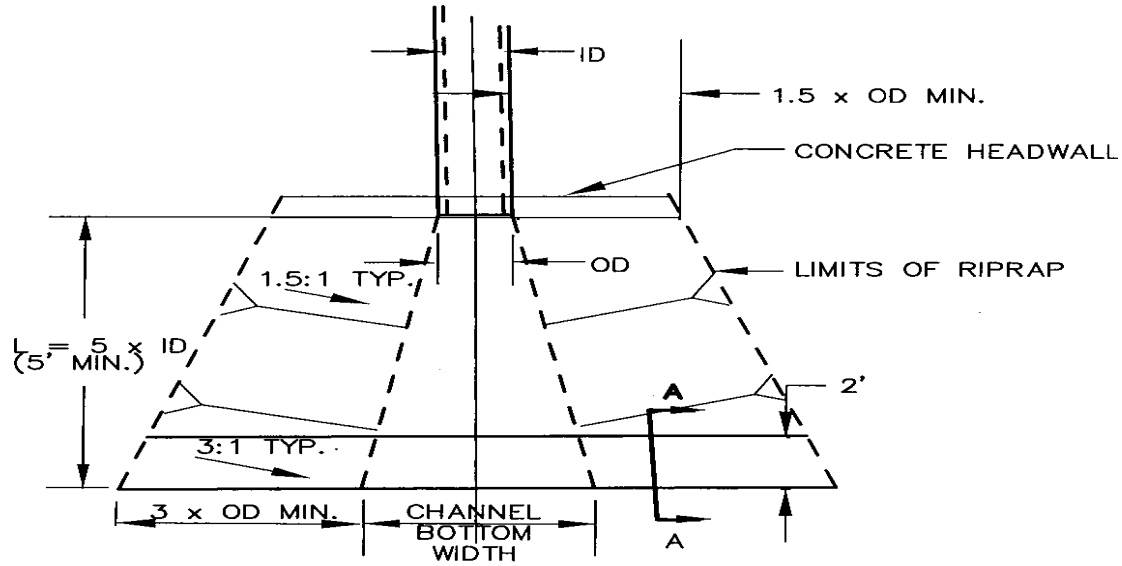

PIPE I.D. (INCHES)	L (FEET)
12	5.0
15	6.5
18	7.5
24	10.0
30	12.5
36	15.0
42	17.5
48	20.0
54	22.5
60	25.0

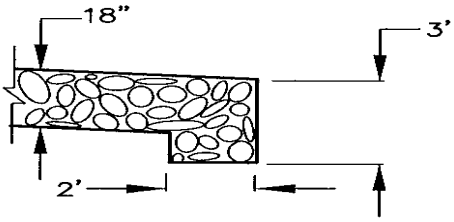

SECTION A – A
TOE WALL

Drawing 9 - Curb Opening

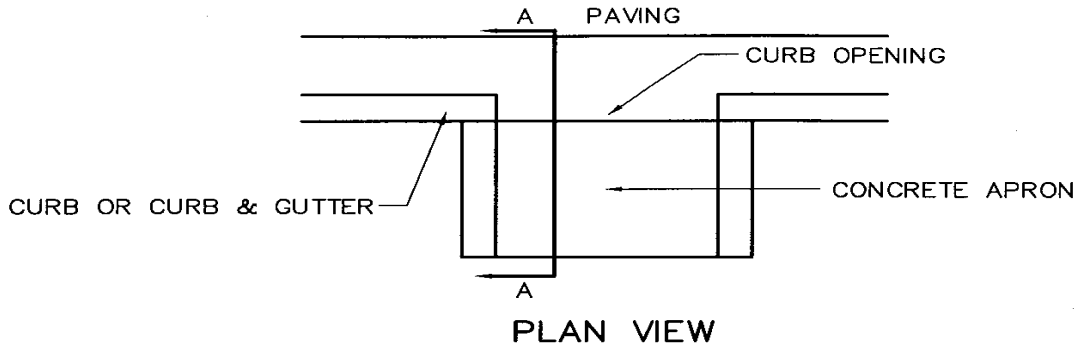

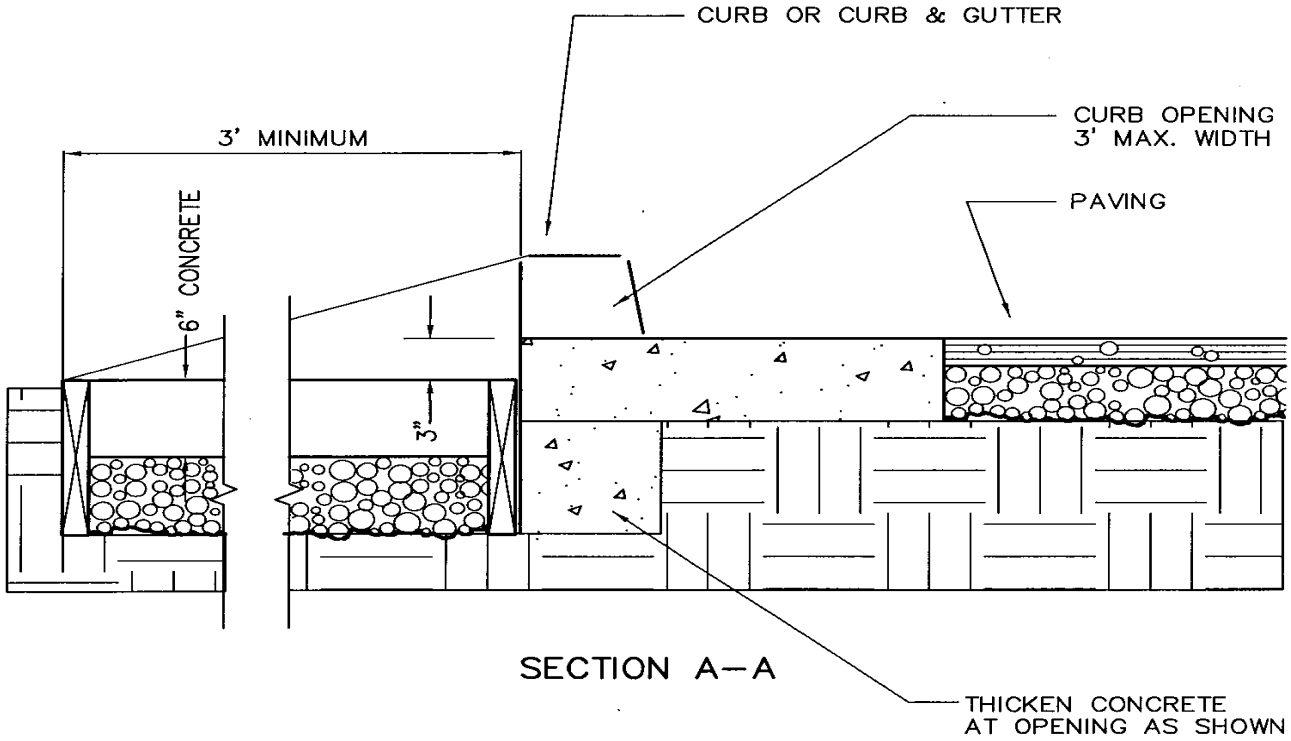

ARTICLE 4. OWNERSHIP and MAINTENANCE

Section 1. Improvements on Public Road Right-of-Way

A. Storm drainage improvements on public right-of-way shall become the property of; and shall be maintained by Christian County upon acceptance of the constructed improvements.

B. As-built drawings of storm drainage improvements shall be provided after Final Inspection but before Final Approval from the County Engineer.

Section 2. Improvements on Private Property

A. Storm drainage improvements on private property shall be maintained by the owner of the lot upon which the improvements are located or by the Homeowners' Association for improvements located in common areas.

B. All such improvements which serve a drainage area shall be located in a drainage easement and the public shall have such rights of access to repair or maintain such facilities.

ARTICLE 5. STORMWATER PLANNING & DESIGN

Section 1. Stormwater Management Goals

In order to ensure protection of the general health and welfare of the citizens of Christian County, planning, and design of stormwater management measures shall meet the following goals:

A. Prevent damage to residential dwellings, and other building structures from floodwaters.

B. Maintain emergency vehicle access to all areas during periods of high water.

C. Prevent damage to roads, bridges, utilities, and other valuable components of the community's infrastructure from damage due to flood waters and erosion.

D. Prevent degradation of surface and groundwater quality from storm water runoff; preserve and protect quality of the environment; and promote conservation of the County's natural resources.

E. Minimize flood water and erosion damage to lawns, recreational facilities, and other outdoor improvements.

F. Minimize traffic hazards from runoff carried in streets and roads.

G. Comply with applicable State and Federal laws and regulations.

H. Meet the foregoing goals in a manner which is cost effective and which minimizes the cost of housing and development while encouraging sound development practices.

I. Encourage innovative and cost effective planning and design of stormwater management facilities

J. Encourage multiple purpose design of stormwater management facilities, to provide opportunities for recreational use, and other benefits to the community wherever possible.

The standards and criteria set forth herein provide the minimum standards for planning and design of stormwater facilities. Where a particular plan or design may be found to be in conflict with a specific standard, achievement of the goals set forth above will have precedence.

Section 2. General Planning and Design Principles

Christian County recognizes that stormwater management is an important component of overall land use planning.

Christian County further recognizes that proper stormwater planning significantly reduces the long term costs to the community both in terms of infrastructure cost and property losses due to flood damage. It is much more cost effective to prevent flood damage by proper design and construction, than to repair and remediate problems, which have occurred through poor planning and design.

The following general principles must be followed in preparing the grading and storm drainage plans for all development sites:

A. Recognize the Existing Drainage System

The storm drainage system differs from other utility systems in very important ways:

1. There is an existing natural drainage system.
2. It is only needed when runoff occurs.
3. The capacity of the system varies greatly depending upon how much it rains.
4. The system does not have to be constructed of man-made components in order to function.

Because of these characteristics there has been a historic inclination for fragmented planning and design of storm drainage facilities.

Proper planning of storm drainage facilities must begin with the recognition of the existing system, and include necessary provisions for preserving or altering the existing system to meet the needs of proposed development or construction.

Methods of delineating existing watercourses are outlined in Article 6.

B. Allow for Increase in Runoff Rates Due to Future Urbanization

As areas urbanize, peak rates of runoff increase significantly. Christian County may require temporary detention and storage of increased volumes of urban runoff in order to minimize increases in flow rates as urbanization occurs. However, the cumulative effects of on-site detention are difficult to predict and control, and development of comprehensive basin-wide runoff models to determine these effects does not appear likely in the foreseeable future.

For this reason, design of storm drainage improvements must be based upon the assumption of fully urbanized conditions in the area under consideration. No reduction in peak flow rates due to detention, unless an approved runoff model has been developed for the drainage basin under consideration. Any detention storage facilities whose effects are considered must be located within approved drainage easements.

C. Provide for Acceptance of Runoff from Upstream Drainage Areas

It is critical that provisions be made to receive runoff from upstream drainage areas. Drainage easements or public right-of-way must extend to a point where the upstream drainage area is 2 acres or less.

Drainage easements or public right-of-way must extend to the point where existing watercourses enter the site. Where the upstream drainage area is 2 acres or less, but does not discharge onto the site through a defined watercourse, the drainage easement shall extend to the point of lowest elevation.

D. Provide a Means to Convey Runoff Across the Site

Stormwater shall be conveyed across the site in a system of overland drainage ways and storm sewers. Overland drainage ways consists of natural waterways, streets, open channels, swales, and overland flow within drainage easements.

E. Discharge of Runoff to Downstream Properties

Concentrated runoff shall be discharged only into existing watercourses, drainage easements, or public road rights-of-way. Where none of these exist, a drainage easement which extends to the nearest watercourse, drainage easement or public road right-of-way must be obtained from the downstream property owner, and proper provisions made for conveyance of the peak flow from the 1% Annual Probability (100-year) storm within the drainage easement.

One of the typical results of urbanization is that diffuse surface flow or "sheet flow" is replaced with concentrated points of discharge. Where concentrated flows are discharged to downstream properties proper provisions must be made to:

1. Allow the flow to spread over the same area as would have occurred for the same rate of flow prior to the development, and
2. Reduce the rate of velocity to rates at least equal to the pre-development values at the same rate of flow.

F. Assess Potential Downstream Flooding Problems

It is important that a determination be made of conditions in the watershed downstream of each development site. Specifically it is important to determine whether there are existing structures, which are subject to an unacceptable flooding hazard.

If areas having an unacceptable flooding hazard occur downstream of a development site, either on-site detention for peak flow control, or mutually agreed off-site improvements will be required, as set forth in Article 7.

G. Assess Potential Water Quality Impacts on Receiving Waters

Sediment, erosion and other water quality controls are required as set forth in Article 3 and Article 9.

Section 3. Drainage Easements

All areas subject to inundation during the 100-year storm must be included in drainage easements. Specific standards for drainage easements to be provided for storm sewers, open channels, and detention facilities are set forth in Article 7.

ARTICLE 6. STORMWATER RUNOFF CALCULATIONS

This article outlines acceptable methods of determining stormwater runoff.

Section 1. General Guidelines

For watersheds with a total tributary area less than 200 acres and a one percent annual probability (100-year) fully developed discharge less than 300 cfs, the design storm runoff may be analyzed using the rational formula.

For watersheds with a total tributary area greater than 200 acres or with a one percent annual probability (100-year) fully developed discharge greater than 300 cfs, the design storm runoff shall be analyzed using an approved hydrograph method.

Section 2. Rational Formula

A. The rational formula, when properly understood and applied, can produce satisfactory results for urban storm sewer design. The rational formula is as follows:

$$Q = CIA$$

Where, Q = Peak discharge in cubic feet per second.

C = Runoff coefficient which is the ratio of the maximum rate of runoff from the area to the average rate of rainfall intensity for the time of concentration.

I = Average rainfall intensity in inches per hour for a duration equal to the time of concentration.

A = Contributing watershed area in acres.

B. The basic assumptions made when applying the rational formula are:

1. The rainfall intensity is uniform over the basin during the entire storm duration.
2. The maximum runoff rate occurs when the rainfall lasts as long or longer than the basin time of concentration.
3. Runoff response characteristics are relatively uniform over the entire basin.
4. The time of concentration is the time required for the runoff from the most hydraulically remote part of the basin to reach the point of interest.

C. The drainage basin should be divided into sub-basins of a size where all of the basic assumptions apply.

D. Time of Concentration

Time of concentration, etc., is calculated by:

tc = ti + tt (5 minutes, minimum); where

ti = initial, inlet or overland flow time in minutes,

tt = shallow channel and open channel flow time in minutes.

E. Overland Flow

Overland flow (sheet flow) time shall be calculated as:

ti = $0.83 * (N \times L / S^{0.5})^{0.47}$ where

ti = initial, inlet or overland flow time in minutes,

N = Coefficient of roughness (from the following table),

L = Overland flow length in feet, (maximum of 300 feet),

S = Overland slope in feet per foot.

ROUGHNESS COEFFICIENTS FOR OVERLAND FLOW
SURFACE DESCRIPTION

Smooth surfaces (concrete, asphalt, gravel or bare soil)	0.05
Smooth bare packed soil, free of stones	0.10
Poor grass, row crops, or moderately rough bare surfaces	0.20
Pasture or average grass cover	0.40
Deciduous timberland	0.60
Conifer timberland, deciduous timberland with deep forest litter or dense grass cover	0.80

Open channel flow velocities may be estimated from Manning's equation. Open channel velocities are generally estimated under bank full conditions.

Drawing 10 - Rainfall Intensity

RAINFALL INTENSITIES FOR USE IN THE RATIONAL FORMULA SHALL BE DETERMINED BY THE FOLLOWING EQUATION:

$$I = \frac{A}{(B + t_c)^m}$$

WHERE,

t_c = TIME OF CONCENTRATION

A, B & m ARE TAKEN FROM THE FOLLOWING TABLE

FREQUENCY	A	B	m
2—YEAR	59.41	13.09	0.83
5—YEAR	64.18	12.84	0.80
10—YEAR	68.62	12.74	0.78
25—YEAR	81.41	13.16	0.78
50—YEAR	85.22	12.87	0.77
100—YEAR	84.29	12.18	0.74

Section 3. Hydrograph Methods

A. Methodologies

The most common hydrograph techniques are those developed by the Corps of Engineers and the Soil Conservation Service. These methods are preferred, however other proven techniques will be accepted.

The Corps of Engineers HEC-HMS, HEC-1 Flood Hydrograph Package, and Soil Conservation Service TR-55 computer models are the preferred runoff models. Other models may be used with approval from the County.

The runoff model must include the entire drainage basin upstream of the proposed development. The model shall be prepared in sufficient detail to ensure that peak runoff rates are reasonably accurate.
The runoff model shall be developed for the following cases:

Case 1: Existing conditions in the drainage basin prior to development of the applicant's property.

Case 2: Existing conditions in the drainage basin with developed conditions on the applicant's property.

Case 3: Fully developed conditions in the entire drainage basin.

B. Rainfall

Rainfall depth-duration-frequency and intensity-duration-frequency curves for the Christian County area are included in the standard drawings. The design rainfall intensities were developed from the U.S. Department of Commerce, National Weather Service, Technical Paper 40 (reference 19) and the National Oceanic and Atmospheric Administration publication "HYDRO-35" (reference 9).

Rainfall depths for use with hydrograph techniques shall be taken from “Rainfall Frequency atlas of the Midwest, Bulletin 71” (reference 23).

Rainfall shall be distributed in time using Huff’s Distribution adapted to local rainfall data (references 20) as shown in the following table. Other distributions may be used upon approval from the County.

C. Storm Duration

A critical duration analysis of storm duration and corresponding rainfall depth shall be conducted to determine the storm duration producing the greatest peak flow from a particular watershed. The critical duration storm shall be used in all subsequent runoff calculations.

Huff's Average Time Distribution
Synthetic Rainfall Mass Curves

Cumulative Fraction of Storm Duration	Cumulative Fraction of Depth 1st-Quartile	2nd-Quartile	3rd-Quartile	4th-Quartile
.00	.00	.00	.00	.00
.05	.12	.04	.03	.02
.10	.26	.09	.06	.05
.15	.40	.14	.10	.08
.20	.51	.19	.13	.10
.25	.59	.25	.16	.13
.30	.65	.32	.20	.16
.35	.71	.40	.23	.18
.40	.75	.52	.27	.21
.45	.78	.61	.33	.24
.50	.82	.68	.39	.28
.55	.84	.73	.46	.32
.60	.87	.78	.56	.35
.65	.89	.82	.68	.40
.70	.91	.86	.79	.44
.75	.93	.89	.85	.50
.80	.95	.92	.89	.58
.85	.96	.94	.92	.68
.90	.97	.96	.95	.83
.95	.99	.98	.97	.93
1.00	1.00	1.00	1.00	1.00

ARTICLE 7. STORMWATER DRAINAGE STRUCTURES

Section 1. Inlets

A. Inlet Locations

Inlets shall be provided at locations and intervals, and shall have a minimum inflow capacity such that maximum flooding depths set below are not exceeded for the specified storm; at all sump locations where ponding of water is not desired, and where drainage cannot be released at the ground surface.

B. Inlet Interception Capacities

Inlet capacities shall be determined in accordance with the Federal Highway Administration HEC-12 & HEC-22 Manuals (reference 5).

Nomographs and methods presented in the Neenah Inlet Grate Capacities report (reference 12) may also be used where applicable.

The use of commercial software utilizing the methods of HEC-12 & HEC-22 is acceptable. It is recommended that software be pre-approved for use by the County.

C. Clogging Factors

The inlet capacities determined as required in this section must be reduced as follows, in order to account for partial blockage of the inlet with debris:

INLET TYPE & LOCATION	CLOGGING FACTOR
Type SS Curb Opening Inlets	
on grades	0.9
in sumps.	0.8
Grated Inlets:	
on grades	0.6
in sumps	0.5

Inlet lengths or areas shall be increased as required to account for clogging.

D. Interception and Bypass Flow

It is generally not practical for inlets on slopes to intercept 100% of the flow in gutters. Inlets must intercept sufficient flow to comply with street flooding depth requirements. Bypass flows shall be considered at each downstream inlet, until all flow has entered approved storm sewers or drainage ways.

E. Allowable Street Depth

Urban streets are a necessary part of the County drainage system. The design for the collection and conveyance of storm water runoff is based on a reasonable frequency and degree of traffic interference. Depending on the street classification, (ie: local, collector, etc.) portions of the street may be inundated during storm events. Drainage of streets are controlled by both minor (2-year) and major (25-year) storm events. The minor system is provided to intercept and convey nuisance flow. Flow depths are limited for the major storm to provide for access by emergency vehicles during most flood events. When the depths of flow exceed the criteria presented in this section a storm sewer or open channel system is required.

F. General Design Guidelines

Allowable Flow Depths: Flow in the street is permitted with maximum allowable depths as follows:

1. **On Grades**

   a. Local streets: crown of the street for the runoff from a 2 year rainfall, top of curb for runoff from a 25 year rainfall. Runoff from a 100-year rainfall should be contained within the right-of-way.

   b. Collector streets: the equivalent of one ten foot driving lane must remain clear of water during a 2 year rainfall, top of curb for runoff from a 25 year rainfall. Runoff from a 100-year rainfall should be contained within the right-of-way.

   c. Arterials and Parkways: two ten foot lanes must remain clear of water, one in each direction, during a 2 year rainfall. Top of curb for runoff from a 25-year rainfall. Runoff from a 100-year rainfall should be contained within the right-of-way.

2. **In Sumps**

   a. Local streets: top of curb from a 2-year rainfall. Runoff from a 25-year rainfall should be contained within the right-of-way. Maximum depth from a 100-year rainfall is 18” at the face of curb.

   b. Collector streets: top of curb from a 2-year rainfall. Runoff from a 25-year rainfall should be contained within the right-of-way. Maximum depth from a 100-year rainfall is 18” at the face of curb.

   c. Arterials and Parkways: Width of gutter from a 2-year rainfall. Runoff from a 25-year rainfall should be contained within the right-of-way. Maximum depth from a 100-year rainfall is 18” at the face of curb.

Where allowable depths are exceeded a storm sewer system must remove the excess water.

3. **Cross Flow**

Cross flow at intersections is permitted up to the following depth.

STREET CLASSIFICATION	2-YEAR STORM ALLOWABLE DEPTH	25-YEAR STORM ALLOWABLE DEPTH
LOCAL	6" in cross pan flow line	12" at gutter
COLLECTOR	No cross flow permitted	6" at gutter
ARTERIAL OR PARKWAY	No cross flow permitted	No cross flow permitted

4. **Hydraulics**

The allowable storm capacity of each street section with curb and gutter is calculated using the modified Manning's formula for both the 2-year and 25-year storm event.

$$Q = 0.56(Z/n)S^{1/2}d^{8/3}$$

Where,
- Q = discharge in cubic feet per second
- Z = cross slope of the street in feet per foot
- d = depth of flow at the gutter in feet
- S = longitudinal slope of the street in feet per foot
- n = Manning's roughness coefficient

Drawing 11 - Curb Inlet Detail

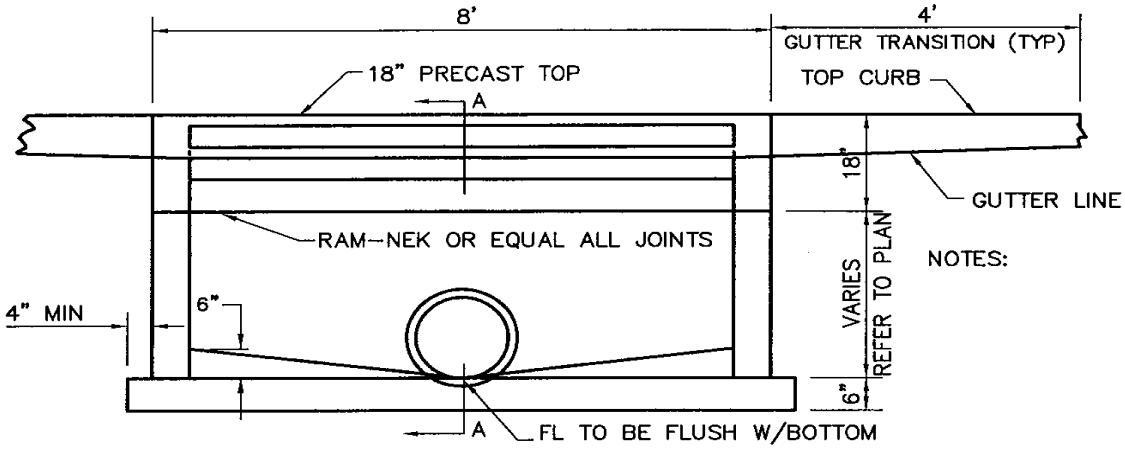

FRONT ELEVATION

1. BOTTOM SHALL BE CAST IN PLACE.
2. TYPE C RING AND COVER SHALL BE PROVIDED.
3. # 4 BARS @ 10" EA. WAY IN WALLS AND SLAB.

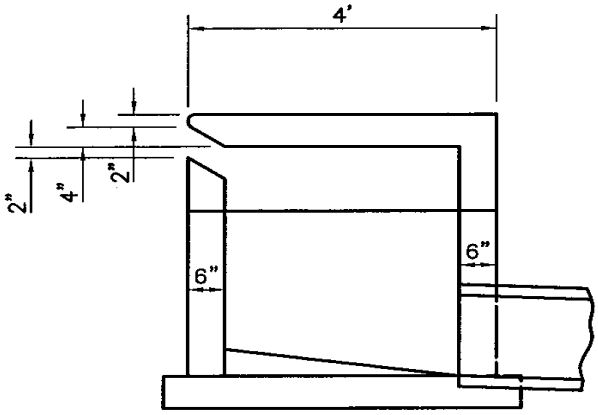

SECTION A–A

G. Types of Inlets Allowed

1. Public Streets

a. Curb Opening Inlets

Type "SS" standard curb opening inlets as shown in Drawing 11 shall be used for public streets with curb and gutter.

b. Grated Inlets

In general the use of grated inlets in streets, which require adjustment when streets are repaved, will not be permitted.

Where conditions are such that curb inlets cannot intercept the required rate of flow, necessary to control street flooding depth or to provide diversion of flow to detention, sedimentation, or infiltration basins, "trench inlets" with veined grates may be specified with approval of the County.

Other types of inlets will not be permitted unless approved by the County.

2. Outside of Public Right-of-Way

The type of inlets specified outside of public right-of-way is left to the discretion of the designer provided the following criteria are met:

a. Maximum flooding depths for the major or minor storm as set forth above are not exceeded.

b. General safety requirements set forth below are met.

c. All inlets shall be depressed a minimum of 2" below the surrounding grade to allow proper drainage to the inlet and prevent inadvertent ponding in the area around the inlet.

d. Inlets in pavements shall be provided with a concrete apron.

H. General Safety Requirements

All inlet openings shall:

1. provide for the safety of the public from being swept into the storm drainage system; the maximum allowable opening shall not exceed 6" in width.
2. be sufficiently small to prevent entry of debris which would clog the storm drainage system;
3. be sized and oriented to provide for safety of pedestrians, bicyclists, etc.

Section 2. Storm Sewers

A. Design Criteria

1. Design Storm Frequency

The storm sewer system, beginning at the upstream end with inlets, is required when the 5-year peak flow in the street exceeds 5 cfs or when allowable street depths are exceeded. Allowable street depths are specified above.

2. Construction Materials

Storm sewers may be constructed using reinforced concrete, corrugated metal (steel or aluminum) or plastic pipe. The materials, pipes, or appurtenances shall meet one or more of the following standards:

PIPE MATERIAL	STANDARD
Reinforced Concrete Pipe-Round	ASTM C-76 or AASHTO M-170
Reinforced Concrete Pipe-Elliptical	ASTM C-507 or AASHTO M-207
Reinforced concrete Pipe-Joints	ASTM C-443 or AASHTO M-198
Reinforced Concrete Pipe-Arch	ASTM C-506 or AASHTO M-206
Pre-cast Concrete Manholes	ASTM C-478 or AASHTO M-199
Pre-cast Concrete Box Pipe	ASTM C-789/C-850 or
Corrugated Steel Pipe-Metallic	AASHTO M-259/M-273
Coated for Sewers and Drains	AASHTO M-36
Corrugated Aluminum Alloy Pipe and Under drains	AASHTO M-196
Bituminous Coated Corrugated Metal Pipe and Pipe Arches	AASHTO M-190
Corrugated PVC Pipe	ASTM D-3034 and ASTM F-679
Corrugated Polyethylene Pipe	ASTM D-1248

3. Vertical Alignment

The sewer grade shall be such that a minimum cover is maintained to withstand AASHTO HS-20 loading on the pipe. The minimum cover depends upon the pipe size, type and class, and soil bedding condition, but shall not be less than 1 foot from the top of pipe to the finished grade at any point along the pipe. If the pipe encroaches on the street subgrade, approval is required. Manholes will be required whenever there is a change in size, direction, elevation grade and slope or where there is a junction of two or more sewers. The maximum spacing between manholes for storm sewers (cross sectional area less than 25 square feet) shall be 400 feet. For large storm sewers (cross sectional area greater than 25 square feet), manholes for maintenance access need only be placed a minimum of every 500 feet; access to the laterals can be obtained from within the larger storm sewer.

The minimum clearance between storm sewer and water main (for new construction), either above or below shall be 12 inches. Concrete encasement of the water line will be required for clearances of 12 inches or less when the clearance between existing water mains cannot be obtained.

The minimum clearance between storm sewer and sanitary sewer (for new construction), either above or below, shall be 18 inches. In addition, when an existing sanitary sewer main lies above a storm sewer, or within 18 inches below, the sanitary sewer shall have an impervious encasement or be constructed of structural sewer pipe for a minimum of 10-feet on each side of the storm sewer crossing.

Siphons or inverted siphons are not allowed in the storm sewer system.

4. **Horizontal Alignment**

Storm sewer alignment between manholes shall be straight except when approved by the County. Approved curvilinear storm sewers may be constructed by using radius pipe. The radius requirement for pipe bends is dependent upon the manufacturer's specifications.

A minimum horizontal clearance of 10 feet is required between sanitary and water utilities and the storm sewer.

The permitted locations for storm sewer within a street ROW are: (a) on centerline, (b) between centerline and curb and (c) behind the curb. Storm sewer shall not be placed on the area within the wheel lanes of the pavement.

5. **Pipe Size**

The minimum allowable pipe size for storm sewers is dependent upon a diameter practical from the maintenance standpoint. For storm sewers less than 50 feet in length the minimum allowable diameter is 15 inches. All other pipe shall have a minimum diameter of 18 inches.

6. **Storm Sewer Capacity and Velocity**

Storm sewers should be designed to convey the design storm (25-year) flood peaks without surcharging the storm sewer. The sewer may be surcharged during larger floods and under special conditions when approved by the County.

The use of storm sewers in areas without overland relief upon is discouraged. If this situation is unavoidable, 100-year capacity shall be provided in the storm sewer system.

The capacity and velocity shall be based on the Manning's n-values presented in Table I. The maximum full flow velocity shall be less than 15 fps. Higher velocities may be approved by the County if the design includes adequate provisions for uplift forces, dynamic impact forces, and abrasion. The minimum velocity in a pipe based on full flow shall be 2.5 fps; and the minimum slope shall be 0.50% to avoid excessive accumulations of sediment. The energy grade line (EGL) for the design flow shall be no more than six inches below the final grade at manholes, inlets, or other junctions. To insure that this objective is achieved, the hydraulic grade line (HGL) and the energy grade line (EGL) shall be calculated by accounting for pipe friction losses and pipe form losses. Total hydraulic losses will include friction, expansion, contraction, bend, manhole, and junction losses. The methods for estimating these losses are presented in the following sections.

7. **Storm Sewer Outlets**

All storm sewer outlets into open channels shall be constructed with a headwall and wingwalls or a flared-end-section. Riprap or other approved material shall be provided at all outlets.

8. **Hydraulic Evaluation**

Presented in this section are the general procedures for hydraulic design and evaluation of storm sewers. The user is assumed to possess a basic working knowledge of storm sewer hydraulics and is encouraged to review textbooks and other technical literature available on the subject.

9. **Pipe Friction Losses**

Pipe friction losses are estimated using Equation 1001 and Manning's formula (Equation 1002) which are expressed as follows:

$$Hf = Sf \times L \qquad (1001)$$

Where, Hf = head loss due to friction (feet)
Sf = friction slope from Manning's equation (feet per foot)
L = length of pipe segment (feet)

and

$$V = 1.49 \times R^{2/3} \times Sf^{1/2} / n \qquad (1002)$$

Where, V = velocity of flow (feet per second)
R = hydraulic radius = A/WP (feet)
Sf = friction slope (feet per foot)
A = area of flow (square feet)
WP = wetted perimeter (feet)

n = Manning's roughness coefficient (Table I)

10. **Pipe Form Losses**

Generally, between the inlet and outlet, the flow encounters, in the flow passageway, a variety of configuration such as changes in pipe size, branches, bends, junctions, expansions, and contractions. These shape variations impose losses in addition to those resulting from pipe friction. Form losses are the result of fully developed turbulence and can be expressed as follows:

$$HL = K\,(V^2/2g) \qquad (1003)$$

Where,
HL = head loss (feet)
K = loss coefficient
$V^2/2g$ = velocity head (feet)
g = gravitational acceleration (32.2 ft/sec^2).

The following is a discussion of a few of the common types of form losses encountered in storm design.

11. **Expansion Losses**

Expansion losses in a storm sewer will occur when the sewer outlets into a channel. The expansion will result in a shearing action between the incoming high velocity jet and the surrounding outlet boundary. As a result, much of the kinetic energy is dissipated by eddy currents and turbulence. The loss head can be expressed as:

$$HL = Kx\,(V_1^2/2g)(1-(A_1/A_2))^2, \qquad (1004)$$

Where,
A = cross section area in square feet
V_1 = average upstream pipe flow velocity, feet per second
Kx = expansion loss coefficient.

Subscripts 1 and 2 denote the upstream and downstream sections respectively. The value of Kx is about 1.0 for a sudden expansion (such as an outlet to a channel) and about 0.2 for a well-designed expansion transition. Table II presents the expansion loss coefficient for various flow conditions.

12. **Contraction Losses**

The form loss due to contraction is:

$$HL = Kc(V_2^2/2g)(1-(A_2/A_1)^2)^2 \qquad (1005)$$

Where, Kc = Contraction loss coefficient

Kc is equal to 0.5 for a sudden contraction and about 0.1 for a well-designed transition. Subscripts 1 and 2 denote the upstream and downstream sections respectively. Table II presents the contraction loss coefficient for various flow conditions.

13. **Bend Losses**

The head losses for bends in excess of that caused by an equivalent length of straight pipe may be expressed by the relation:

$$HL = Kb(V_2/2g) \qquad (1006)$$

Where, Kb = Bend coefficient

The bend coefficient has been found to be a function of: (a) the ratio of the radius of curvature of the bend to the width of the conduit, (b) deflection angle of the conduit, (c) geometry of the cross section of flow, and (d) the Reynolds Number and relative roughness. Recommended bend loss coefficients for standard bends, radius pipe, and bends through manholes are presented in Table II.

14. **Junction and Manhole Losses**

A junction occurs where one or more branch sewers enter a main sewer, usually at manholes. The hydraulic design of a junction is in effect the design of two or more transitions, one for each flow path. Allowances should be made for head loss due to the impact at junctions. The head loss at a junction for each pipe entering the junction can be calculated from:

$$HL = (V_2^2/2g) = Kj(V_1^2/2g) \qquad (1007)$$

Where, V_2 = the outfall flow velocity
V_1 = the inlet velocity
Kj = junction loss coefficient

Because of the difficulty in evaluating hydraulic losses at junctions (Reference 6) due to the many complex conditions involving pipe size, geometry of the junction and flow combinations, a simplified table of loss coefficients has been prepared. Table II presents the recommended energy loss coefficients for typical manhole or junction conditions encountered in the urban storm sewer system.

15. **Partially Full Pipe Flow**

When a storm sewer is not flowing full, the sewer acts like an open channel and the hydraulic properties can be calculated using open channel.

16. **Storm Sewer Outlets**

When the storm sewer system discharges into an open channel, additional losses, in the form of expansions losses, occur at the outlet. For a headwall and no wing walls, the loss coefficient Ke is 1.0. For a headwall with 45-degree wing walls, the loss coefficient is about 1.14. For a flared-end-section (which has a D2/D1 ratio of 2 and a theta angle of around 30 degrees) the loss coefficient is approximately 0.5.

17. **Connection Pipes**

Connector pipes are used to convey runoff from an inlet to the storm sewer. If, however, the storm sewer runs through the inlet, then a connector pipe is not needed. Connector pipes can connect a single inlet to the storm sewer or they can be connected in a series.

These bends, turns, and flows through the connector pipe give rise to three hydraulic losses: a change from static to kinetic energy to get the water moving through the connector pipe, an entrance loss from the inlet to the connector pipe, and a friction loss along the length of the connector pipe. The total head loss in the connector pipe can be calculated form the following equation:

$$Hcp = Hv + Ke \times Hv + Sf \times L \qquad (1009)$$

Where,
Hcp = head loss in the connector pipe (feet)
Ke = Entrance loss coefficient.
Hv = velocity head in the pipe, assuming full pipe flow (feet)

and the other variables are as previously defined. The value of the entrance loss coefficient is determined from Table II.

If the connector pipes are connected in series, the head loss in each pipe is calculated from Equation 1009 and the total head loss is the summation of the individual head losses.

B. Easements

Easements shall be provided for all storm sewers constructed in Christian County that are not located within public rights of way. The minimum easement widths are as follows:

For pipes 48 inches or less in diameter or width the required easement width is 15 feet.

For pipes and boxes greater than 48 inches in width the required easement width is 15 feet plus half the width of the proposed storm sewer.

Storm sewers greater than 8 feet in depth to the flow line may require additional easement width.

All easements required for construction, which are not included on the final plat shall be recorded and filed with the County prior to approval of the construction drawings.

Section 3. Design Standards for Culverts

A. Structural Design

All culverts shall be designed to withstand an HS-20 loading in accordance with the design procedures of AASHTO "Standard Specifications for Highway Bridges". The designer shall also check the construction loads and utilize the most severe loading condition. The minimum allowable cover is one foot.

B. Design Capacity

For drainage areas less than 1 square mile in size, culverts shall be designed to pass the 25-year storm with one foot of freeboard prior to overtopping the road or driveway. For drainage areas greater than 1 square mile, culverts shall be designed to pass the 100-year storm with one foot of freeboard. In some instances, FEMA regulations may require greater than that specified above.

C. Headwater

The maximum headwater for the major storm design flow shall be 1.5 times the culvert diameter for round culverts or 1.5 times the culvert rise dimension for shapes other than round. In some instances, FEMA regulations may restrict headwater to less than that specified above.

D. Inlet and Outlet Protection

For road and driveway culverts larger than 15 inches, culverts are to be designed with protection at the inlet and outlet areas as provided in Article 3 of this criteria. Headwalls or end sections are to be located a sufficient distance form the edge of the shoulder or the back of walk to allow for a maximum slope of 3H:1V to the back of the structure. The type of outlet protection required is as follows:

V < 7 FPS 7 FPS < V < 15 FPS V >15PS

Minimum Riprap protection Energy Riprap protection
or Dissipater Energy dissipater

E. Velocity Limitations

The maximum allowable discharge velocity is 15 feet per second.

F. Culvert Hydraulics

It is recommended that the procedures outlined in the publication "Hydraulic Design of Highway Culverts" reference 4 be used for the hydraulic design of culverts. Backwater calculations demonstrating the backwater effects of the culvert may be required.

Section 4. Design Standards for Bridges

A. Structural Design

All bridges shall be designed to withstand an HS-20 loading in accordance with the design procedures of AASHTO "Standard Specifications for Highway Bridges" (reference 13). The designer shall also check the construction loads and utilize the most severe loading condition.

B. Design Capacity

Bridges shall be designed to pass the 100-year storm with one foot of freeboard between the water surface and the bridge low chord. Bridge capacity shall be designed such that all FEMA regulations are met.

C. Backwater

Backwater is defined as the rise in the water surface due to the constriction created by the bridge approach road fills. The maximum backwater for the 100-storm design flow shall be one foot. In some instances, FEMA regulations may restrict backwater to less than that specified above.

D. Velocity Limitations

Discharge velocities through bridge openings shall be limited to 15 feet per second. Abutment and channel scour protection shall be provided at all bridges.

E. Bridge Hydraulics

All bridge hydraulics shall be evaluated using the procedures presented in the publication "Hydraulics of Bridge Waterway" Reference 14. Backwater calculations demonstrating the effects of the bridge and approach fills compared to the existing flood stages shall be submitted for all bridges.

Section 5. Design Standards for Open Channels

A. General Design Guidelines

1. Natural Channels

The hydraulic properties of natural channels vary along the channel reach and can be either controlled to the extent desired or altered to meet the given requirements. Natural channels used as part of the drainage system must be evaluated for the effects of increased peak flow, flow duration and volume of runoff due to urbanization. A 25' setback is required for all natural waterways.

2. Grass Lined Channels

Grass lined channels are the most desirable of the artificial channels. The channel storage, lower velocities, and the greenbelt multiple use benefits obtained create significant advantages over other artificial channels. Unless existing development restricts the availability of right of way, channels lined with grass should be given preference over other artificial types. The minimum slope in a grass-lined channel shall be 1.0% unless a concrete low flow channel is installed**.**

3. Concrete Lined Channels

Concrete lined channels are sometimes required where right of way restrictions within existing development prohibit grass-lined channels. The lining must be designed to withstand the various forces and actions, which tend to overtop the bank, deteriorate the lining, erode the soil beneath the lining and erode unlined areas. The minimum slope in a concrete lined channel shall be 0.50%.

4. Rock Lined Channels

Rock lined channels are constructed from ordinary riprap or wire enclosed riprap (gabions etc.). The rock lining permits higher design velocity than for grass lined channels. Rock linings will normally be used only for erosion control at culvert/storm sewer outlets, at sharp channel bends, at channel confluences and at locally steepened channel sections.

5. Roadside Ditches

Ditches constructed alongside and in conjunction with roadways shall be of sufficient capacity to meet the allowable street flow depth limits as specified in this section.

6. Other Lining Types

The use of fabrics and other synthetic materials for channel linings has increased over the past several years. Proposed improvements of this type will be reviewed on an individual basis as for applicability and performance.

B. Hydraulics

An open channel is a conduit in which water flows with a free surface. The calculations for uniform and gradually varied flow are relatively straightforward and are based upon similar assumptions (e.g. parallel streamlines). The basic equations and computational procedures are presented in this subsection.

1. Uniform Flow

Open channel flow is said to be uniform if the depth of flow is the same at every section of the channel. For a given channel geometry, roughness, discharge and slope, there is only one possible depth, the normal depth. For a channel of uniform cross section the water surface will be parallel to the channel bottom for uniform flow.

The computation of normal depth for uniform flow shall be based upon Manning's formula as follows:

$$Q = (1.49/n)AR^{2/3} S^{1/2}$$

Where,
- Q = Discharge in cubic feet per second (cfs)
- n = Roughness coefficient (Table I)
- A = Cross sectional flow area in square feet
- R = Hydraulic radius, A/P, in feet
- P = Wetted perimeter in feet
- S = Slope of the energy grade line (EGL) in feet/foot

For channels with a uniform cross section the EGL slope and the bottom slope are assumed to be the same.

2. Critical Flow

The design of earth or rock channels in the critical flow regime (Froude numbers from 0.9 to 1.2) is not permitted. The Froude number is defined as follows:

$$F = V/(gD)^{0.5}$$

Where,
- F = Froude number
- V = Velocity in feet per second (fps)
- g = Acceleration of gravity, 32.2 ft/sec^2
- D = Hydraulic depth in feet = A/T
- A = Cross sectional flow area in square feet
- T = Top width of flow area in feet

The Froude number shall be calculated for the design of all open channels.

3. **Gradually Varied Flow**

The most common occurrence of gradually varied flow in storm drainage is the backwater created by culverts, storm sewer inlets or channel constrictions. For these conditions the flow depth will be greater than normal depth in the channel and the water surface profile must be computed using backwater techniques.

Backwater computations can be made using the methods presented in Chow (reference 1). Many computer programs are available for computation of backwater curves. The most widely used program is HEC-RAS, Water Surface Profiles, developed by the U.S. Army Corps of Engineers (reference 2) and is the program recommended for backwater profile computations.

C. Design Standards

1. **Flow Velocity**

Maximum flow velocities shall not exceed the following:

Channel Type	**Max. Velocity**
Grass lined*	5 fps
Concrete	15 fps
Rock Lined	10 fps

*Refer to item 6. below

2. **Maximum Depth**

The maximum allowable channel depth of flow is three feet for the 25-year flow.

3. **Freeboard Requirements**

Freeboard is defined as the vertical distance between the computed water surface elevation for the design flow and the minimum top of bank elevation for a given cross section. For all channels one-foot minimum of freeboard is required. Freeboard shall be in addition to super elevation.

4. **Curvature**

The minimum channel centerline radius shall be three times the top width of the design flow.

5. **Super Elevation**

Super elevation shall be calculated for all curves. An approximation of the super elevation h, may be calculated from the following formula:

$$H = V^2T/(gr)$$

Where,
h = Super elevation in feet
V = Velocity in fps
T = Top width of flow area in feet
G = Acceleration of gravity, 32.2 ft/sec^2
r = radius of curvature in feet.

Freeboard shall be measured above the super elevated water surface.

6. **Grass Channels**

Side slopes shall be 3 (horizontal)to 1 (vertical) or flatter. Steeper slopes may be used subject to additional erosion protection and approval from the County.

For design discharges greater than 50 cfs, grade checks shall be provided at a maximum of 200' horizontal spacing.

The variation of Manning's n with the retardance, and the product of mean velocity and hydraulic radius as shown in Figure 7.23 in reference 17 shall be used in the capacity calculations. Retardance curve C shall be used to determine the channel capacity and retardance curve D shall be used to determine the velocity.

D. Easements

Easements shall be provided for all open channels constructed in Christian County that are not located within public rights of way. The minimum easement width for open channels is the flow width inundated by a 100-year event plus 15 feet.

All easements required for construction, which are not included on the final plat shall be recorded and filed with the County prior to approval of the construction drawings.

TABLE I - MANNING'S n-VALUES

Closed Conduit	
Concrete pipe	.013
Corrugated steel pipe	.024
Open Channels	
gabions	.035
concrete	.015
riprap	$.0395\ d_{50}^{0.17}$
grouted riprap	.027
gunite	.028
earth lined	.020 to .040
grass lined	.029 to .100
natural streams	.025 to .100

TABLE II - LOSS COEFFICIENTS

A. EXPANSION LOSS COEFFICIENTS

EXPANSION ANGLE	COEFFICIENT, Kx D2/D1=3	D2/D1=1.5
10	.17	.17
20	.40	.40
45	.86	1.06
60	1.02	1.21
90	1.06	1.14
120	1.04	1.07
180	1.00	1.00

Where, D2 = downstream diameter and D1 = upstream diameter.

B. CONTRACTION LOSS COEFFICIENTS

ENTRANCE	COEFFICIENT, Kc
Bell-mouthed	.04
Square-edged	.50
Groove-edged	.20

D2/D1	COEFFICIENT, Kc
<.4	.5
.4	.4
.6	.3
.8	.1

C. BEND LOSS COEFFICIENTS, PIPE BENDS

DEFLECTION ANGLE	COEFFICIENT, Kb
90	.50
60	.43
45	.35
22.5	.20

TABLE II - LOSS COEFFICIENTS

BENDS AT MANHOLES (no special shaping)

DEFLECTION ANGLE	COEFFICIENT, Kb
90	1.30
60	0.68
45	0.44
22.5	0.14

BENDS AT MANHOLES (Curved or deflector)

DEFLECTION ANGLE	COEFFICIENT, Kb
90	1.04
60	0.48
45	0.32
22.5	0.10

ARTICLE 8. STORMWATER DETENTION DESIGN

Section 1. Purpose

Detention facilities are used to reduce storm water runoff rates by storing excess runoff. The usual function of a detention facility is to provide sufficient storage such that peak runoff rates are not increased when development occurs.

Section 2. Policy

The primary goal of the Christian County storm water management program is the prevention of flood damage to residential, commercial and public property.

A. In adopting this policy, Christian County recognizes that:

- there are areas in the County where flooding occurs because of inadequately sized drainage ways,
- flooding depths and frequency will increase as development occurs upstream of these areas,
- detention basins are the only effective "on-site" means which can be used to control peak runoff storm water rates as areas develop.

B. Christian County further recognizes that:

- the best means to assure effective performance of a detention basin is perform reservoir routing calculations using hydrographs,
- use of the Simplified Volume Formula frequently does not result in adequately sized detention facilities,
- the inaccuracy of the Rational Method, upon which the Simplified Volume Formula is based, increases as the area under consideration increases,
- even though the Simplified Volume Formula has severe limitations, requirement of detailed analytical methods may not be justified in all cases,
- detention basins designed using the Simplified Volume Formula do provide a minimal amount of flooding protection and potential water quality benefits by functioning as sediment basins.

Therefore, in order to provide a reasonable level of flood protection to homes and businesses, while maintaining a climate favorable for development and economic growth, Christian County has established the following policy for design of detention facilities:

Section 3. Methods of Analysis

The method of analysis to be required for the design of detention facilities will be determined as follows:

A. Detailed Analysis will be Required in the Following Cases:

1. In areas where residences or other structures located downstream of a development can be shown to have an imminent flooding hazard a detailed analysis using hydrographs and reservoir routing techniques will be required.

   Residences or other structures will be defined as having an imminent flooding hazard when the lowest point, at which surface runoff may gain entry, is located at, or below, the estimated flooding level which would result from a storm with an annual probability of 1% or greater under conditions existing in the basin prior to development of the applicant's property. (i.e. affected by the "100-year" storm)

   Consideration of downstream flooding problems will be limited to the area which may reasonably be expected to be significantly affected by runoff from the applicant's property.

2. Detailed analysis will be required for all detention facilities where the peak runoff rate from the area upstream of the detention facility (off site and on site) exceeds 50 cfs (cubic feet per second) for a storm with an annual probability of 1% (the "100-year" storm) under fully developed conditions. (Note : This would be the rate of flow from approximately 12 acres for residential areas or 5 acres for fully paved commercial areas.)

B. Simplified Analysis will be Permitted in the Following Cases:

For areas where there are no imminent downstream flooding problems, and where the peak runoff rate from the drainage area (off site and on site) upstream of the detention facility does not exceed 50 cfs for the 1% annual probability ("100-year") storm under fully developed conditions, the Simplified Volume Formula may be used.

Section 4. Alternatives to Detention

A. Criteria for Approving an Alternative to Detention

The County will evaluate each request for an alternative design or fee in lieu of detention based on the following criteria. Christian County reserves the right to set precedent with each case considered depending upon the unique circumstances surrounding each request.

1. Size of site in relation to the stormwater generated.*
2. Size of the site in relation to the drainage area.*
3. Impact on properties downstream of site.*
4. Location of the site with respect to floodplains, streams or other large watercourses.
5. Location of the site with respect to environmentally sensitive areas.
6. Approval of previous requests.

* Downstream impacts shall generally be considered insignificant when the added upstream impervious area is less than 10% of the total contributing watershed area. Exceptions to this rule include development where downstream areas are known to have an imminent flooding hazard as defined in Article 8.

B. Residential Subdivisions

Unless otherwise approved by the County, through review of stormwater calculations, and criteria referenced herein, detention shall be required in all major residential subdivisions. Upon request by a developer, the County may consider alternative in cases where it can be proven that the absence of detention will not adversely affect downstream property owners. Each request will be evaluated on a case-by-case basis.

C. Justified Exceptions

The County may consider, upon request, a waiver of detention for sites, in which the alteration of the site is inconsequential and will not substantially increase the runoff. A justified exception will be granted for sites based on the following criteria:

a. Existing sites in which the addition of impervious surface will not increase more than 5,000 square feet.

b. Sites in which existing gravel, chat or stone parking lots or driveways are paved with asphalt cement or concrete surfaces. This shall not apply to parking areas or circulation routes in which vegetation has consumed the site and altered the ability to shed or absorb runoff. The County shall exercise strict discretion with respect to approving exceptions based on these criteria.

c. Sites in which a change in use has occurred, that does not increase the impervious area of the site.

d. Subdivisions meeting the definition of a minor subdivision or the development of individual single-family-residential homes on individual lots in existing subdivisions.

D. Procedure

A request for approval of an alternative to detention must begin with the applicant providing the County with stormwater calculations for the increased runoff from the development. In addition to providing calculations, the applicant must submit a request for alternative design based on the criteria established above. The County Engineer will coordinate review of the request with County staff. If the County Engineer and staff determines that the request is justified the Planning & Zoning staff will notify the applicant or his representative of the approval.

Section 5. Innovation in Design

It is the desire of the County that detention facilities be designed and constructed in a manner to enhance aesthetic and environmental quality of the County as much as possible.

Christian County therefore encourages designs, which utilize and enhance natural settings, and minimize disturbance and destruction of wooded areas, natural channels, and wetlands.

Section 6. Interpretation

Interpretations of the detention policy will be made by the County Engineer in writing. Where disagreements may arise over the interpretation of the requirements set forth herein, appeals may be made in accordance with procedures established by the Christian County Zoning Regulations, the Christian County Subdivision Regulations, or the Christian Building Regulations, as applicable.

Section 7. Design Criteria

A. General

1. Detention facilities shall discharge into a drainage easement or public right of way.
2. One foot of freeboard shall be provided between the maximum water surface elevation (maximum stage for a 1% annual probability event) and the minimum top of berm or wall elevation.
3. Embankment slopes steeper than three horizontal to one vertical (3H:1V) are not permitted.
4. In certain instances, such as when the existing development conditions runoff from a watershed would exceed the capacity of the existing downstream facilities, retention basins (i.e., no outlet

or with a release rate at the capacity of the downstream facilities) for the storm runoff may be required by the County.

5. Dry detention basins shall maintain a minimum bottom slope of two feet per hundred feet (2%).

6. Trickle channels shall have a minimum slope of one half foot per hundred feet (0.5%).

7. The maximum allowable depth of ponding for parking lot detention is 12 inches.

8. Parking lot detention may not inundate more than 10% of the total parking area.

9. All parking lot detention areas shall have a minimum of two signs posted identifying the detention pond area. The signs shall have a minimum area of 1.5 square feet and contain the following message:

WARNING:

This area is a storm water detention pond and is subject to periodic flooding to a depth of 12 inches.

10. The sign shall be reflective and have a minimum height of forty-eight (48) inches from the bottom of the sign to the parking space finished grade. Any suitable materials and geometry of the sign are permissible, subject to approval by the County.

B. Detailed Analysis

1. Detailed analysis shall be performed using hydrograph methodologies and reservoir routing techniques.

2. The most common techniques are those developed by the Corps of Engineers and the Soil Conservation Service. These methods are preferred, however other proven techniques will be accepted.

3. Detention basins designed by detailed methods shall be designed on the basis of multiple storm recurrence frequencies to ensure that they function properly for both frequent storms and large infrequent storms.

4. A minimum of three recurrence frequencies, the 50%, 10% and 1% annual probability storms (the "2-year, 10-year and 100-year" storms) must be considered.

5. The runoff model must include the entire drainage basin upstream of the proposed detention pond. The model shall be prepared in sufficient detail to ensure that peak runoff rates are reasonably accurate.

6. The runoff model shall be developed for the following cases:

Case 1: Existing conditions in the drainage basin prior to development of the applicant's property.

Case 2: Existing conditions in the drainage basin with developed conditions on the applicant's property.

Case 3: Fully developed conditions in the entire drainage basin.

Cases 1 & 2 are utilized to determine the required detention volume and the type of outlet structure to be provided, and shall be analyzed for the three storm recurrence frequencies required above.

7. The detention facility shall be designed such that peak outflow rates from the facility for Case 2 are no greater than the rates determined in Case 1 for each of the three storm recurrence frequencies required.

8. The storage volume provided shall not be less than the difference in total runoff volume between Case 1 and Case 2.

   Case 3 is used determine the size of the overflow spillway. Case 3 need only be analyzed for the 1% annual probability ("100-year").

9. The overflow spillway will, in most cases, be combined with the outlet structure.

C. Submittals

The following information must be submitted for detention ponds designed by detailed methods:

1. Information regarding analytical methods and software to be used, including:

   - Name of software to be used.
   - Type and distribution of precipitation input.
   - Method for determining precipitation losses.
   - Type of synthetic hydrograph.
   - Method for routing hydrographs.
   - Method used for reservoir routing.

2. Map(s) showing sub-basin delineation, topography, presumed flow routes, and pertinent points of interest; soil types; existing basin development conditions used in the model; fully developed conditions used in the model.

3. Routing diagram for the runoff model.

4. A summary of sub-basin characteristics used for program input.

5. Stage-area or stage-storage characteristics for the basin in tabular or graphic form.

6. Stage-discharge characteristics for the outlet structure and overflow spillway in tabular or graphic form; hydraulic data for weirs, orifices, and other components of the control structure.

7. A printout of the input data file.

8. A summary printout of program output, including plots of hydrographs. (These are intended to be the printer plots generated by the software.)

D. Simplified Analysis

1. **Method of Evaluation**

Differential runoff rates shall be evaluated by equation:

$$R = (Cd \times I_{100}) - (Cu \times I_{100})$$

Where,
R = Differential Runoff Factor
Cd = Runoff Coefficient for developed conditions
Cu = Runoff Coefficient for developed conditions
I_{100} = Intensity for 100 year storm

"C" values shall be determined from the following table:

SUGGESTED RUNOFF COEFFICIENTS

"C" Value	**Surface Conditions**
.10 - .15	- Tall grass, brush
.15 - .20	- Parks, golf courses, farms, and one acre single family residences
.35	- Single family residences on lots of not less than 15,000 sq. ft.
.45	- Single family residences on lots of not less than 10,000 sq. ft.
.47	- Single family residences on lots of not less than 7,500 sq. ft.
.51	- Single family residences on lots of not less than 6,000 sq. ft.
.90	- Gravel surfaces.
.95	- Asphalt and concrete surfaces.
1.00	- Buildings and other structures

E. Volume of Detention

Volume of detention shall be determined according to the "Simplified Volume Formula", as follows:

V = R X A X tc (min.) x 60 (sec./min.)

V = Total volume of detention (cu. ft.)
R = Differential Runoff Factor
A = Area of project in acres
tc = Time of concentration (30 minutes, minimum, for volume calculation only)

F. Time of Concentration

SCS Method

The preferred method for determining time of concentration shall be the method set forth in Chapter 3 of the Soil Conservation Service Technical Release No. 55, "Urban Hydrology for Small Watersheds", 2nd Edition, 1986.

Other Methods

Time of concentration may also be calculated by other accepted methods providing reasonable results.

The time of concentration used in the formula shall be determined based upon existing conditions.

G. Rainfall Intensity

Rainfall intensity shall be determined from Drawing 10.

H. Required Volume

The required volume of detention shall be determined from the following Table:

Calculated Volume	Required Volume
1 cu. ft. thru 500 cu. ft.	500 cu. ft.
501 cu. ft. thru 5,999 cu. ft.	Round up to nearest 500 cu. ft.
5,000 cu. ft. thru 9,999 cu. ft.	Round up to nearest 1,000 cu. ft.
10,000 cu. ft. thru 49,999 cu. ft.	Round up to nearest 5,000 cu. ft.
Above 50,000 cu. ft.	Round up to nearest 10,000 cu. ft

I. Control Structures – Simplified Analysis

1. Detention facilities designed by the simplified analysis shall be provided with obvious and effective outlet control structures. These outlet structures may include v-notch weirs or rectangular weirs, as well as pipe. Plan view and sections of the structure with adequate detail shall be included in plans.
2. The design discharge (Q) for the low-flow outlet shall not exceed the existing runoff for the one-year storm. The maximum discharge shall be designed to take place under total anticipated design-head conditions. The design-head storage volume is not to be considered a part of the volume of detention required.
3. Sizing of a low-flow pipe shall be by inlet control.
4. Low-flow pipes shall not be smaller than four (4) inches in diameter to minimize maintenance and operating problems, except in parking lot and roof detention where minimum size and configuration of opening shall be designed specifically for each condition.
5. Overflow spillways will be required on all detention facilities, which have storage volumes of 1,000 or more cubic feet.
6. The overflow opening or spillway shall be designed so that the combination flow of the low flow outlet and the flow over the spillway will not exceed the total peak runoff for the improved area. The total peak runoff is to be determined from a 100 year storm event.

ARTICLE 9. SINKHOLES AND KARST FEATURES

Section 1. General

Christian County is located on or near the Springfield Plateau of the Ozark physiographic region. This area is underlain by Mississippian Age limestone, which is highly susceptible to solutional weathering. As a result, sinkholes, springs and caves are common.

In many areas of the County special consideration must be given to flood hazards and potential for groundwater contamination due to the presence of sinkholes, caves, losing streams, springs, and other features associated with karst geology.

The requirements set forth herein, are intended to provide specific criteria for design and construction for any site upon which sinkholes or other karst features are located.

Interpretations of these requirements shall be made and appeals may be made according to the procedures set forth in these Design Criteria.

Section 2. Policy

In keeping with the intent of the Christian County stormwater management plan the following policy is set forth for development in areas containing sinkholes:

A. Development in sinkhole areas will be based upon the following axioms:

1. Avoidance
2. Minimization
3. Mitigation

B. Construction in sinkholes shall be avoided. Exceptions will be made only in situations where it can be conclusively demonstrated that there are no practical alternatives to such construction. These situations are mostly likely to arise where:

1. An underground cavity has caused a collapsed sinkhole to form, after subdivision approval or building construction.
2. A sinkhole has been altered or filled either unknowingly or prior to passage of these regulations.
3. Maintenance and operation is required for existing roads and utilities.
4. Location of existing streets or utilities would render access or utility service to a property impractical or cost prohibitive.

In these types of cases, measures which will have minimal impact on the sinkhole or receiving water may be proposed. Plans for minimal alteration can be approved provided it is conclusively demonstrated that the proposed plan is the minimum practical alternative.

In these cases potential impacts of construction on the sinkhole and receiving waters must be studied and assessed, and recommendations made for mitigation of potential impacts upon surface flooding and groundwater quality before the plans can be approved. The degree and sophistication of study required will increase in proportion to the potential impacts.

Section 3. Definitions

Sinkhole

Any depression in the surface of the ground, with or without collapse of adjacent rock that provides a means through which surface water can come into contact with subsurface water.

Sinkhole depressions may be gradual or abrupt; they may or may not have a well defined eye. While most sinkholes can be defined as the area within a "closed contour", some sinkholes such as those located on the sides of hills may not.

All sinkholes provide discreet points of recharge to groundwater.

Sinkhole Watershed

The ground surface area that provides drainage to the sinkhole. This area extends beyond the sinkhole depression, and generally crosses property boundaries.

Unaltered Sinkhole

A sinkhole that has never been altered or disturbed.

Altered Sinkhole

A sinkhole that has been filled, excavated, or otherwise disturbed.

Collapsed Sinkhole

A subsidence or cave-in of the ground surface caused when soil overburden can no longer be supported by underlying strata due to the presence of subsurface solution cavities.

Sinkhole Eye

Generally, a visible opening, cavity, or cave in the bottom of a sinkhole, sometimes referred to as a swallow hole.

Sinkhole Rim

The perimeter of the sinkhole depression. The sinkhole rim will generally vary in elevation.

Sinkhole Cluster Area

An area containing 2 or more sinkholes located in close proximity, generally interconnected by groundwater conduits.

Terminal Sinkhole

The lowest sinkhole in a sinkhole cluster to which any surface water overflowing from other sinkholes in the cluster will flow.

Sinkhole Flooding Area

The area innundated by runoff from a storm with an annual exceedance probability of 1% and a duration of 24 hours.

Qualified Geologist

A person who has met or exceeded the minimum geological educational requirement and who can interpret and apply geologic data principles, and concepts and who can conduct field or laboratory geologic investigations (per RSMo); and who by reason of experience and education, has an understanding of local karst geology.

Qualified Professional Engineer

A person registered to practice engineering according to the laws of the State of Missouri, and who by reason of technical education and experience has a background in the fundamentals of storm drainage and karst geology.

Heavy Equipment

Motorized equipment having a gross weight of more than 6 tons.

Light Equipment
Motorized equipment weighing 6 tons or less.

Section 4. Permits Required

A. Soil Erosion & Control Permit

A grading permit must be obtained prior to any alteration of sinkholes associated with new subdivision construction in accordance with County regulations.

Procedures and requirements for grading permits are set forth in Article 3.

B. Other permits

Other permits from State or federal agencies may be required, as outlined in Article 1 of these Design Criteria, depending upon the size and nature of the proposed activity.

Section 5. General Plan Requirements

General requirements for grading and drainage plans are set forth in Article 3, Article 6 and Article 7 of these Design Criteria.

Section 6. Sinkhole Evaluation

An evaluation including the following information shall be made for all sites upon which sinkholes are fully or partially located:

A. The site plan for the proposed development must show the following items with respect to location of proposed construction, proposed or existing property lines, and existing structures:

1. **Sinkholes**

   a. Location and limits of the area of the sinkhole depression as determined by field surveys or other reliable sources as may be approved.

      Location of sinkholes based solely upon USGS 7-1/2 Minute Series Quadrangle Maps will not be considered sufficient unless field verified.

   b. Location and elevation of the sinkhole eye where visible or known.

   c. Topographic contours at maximum intervals of 2 feet, and spot elevations sufficient to determine the low point on the sinkhole rim and the profile of the potential overflow area.

   d. Minimum entry elevations of any existing structures located within the sinkhole rim.

   e. Elevation of any roadway located within or adjacent to the sinkhole.

2. **Water Supply Sources**

a. The approximate location of public or private water supply sources such as springs or wells, as determined from information available from the County and Missouri Department of Natural Resources that are located within a 500' radius of the sinkhole.

b. Boundaries of any known recharge areas to wells or springs as determined from information available from the County and Missouri Department of Natural Resources.

3. **Other Geologic Features**

Location of caves, springs, faults and fracture trends, geologic mapping units based upon information from the County or other reliable sources.

B. Flooding Limits for the Sinkholes Determined as Set Below:

1. A drainage area map showing the sinkhole watershed area.

Where the site is located in a sinkhole cluster area, this map shall be extended to include the watershed area any sinkholes located downstream of the site which may receive overflow drainage from the site.

C. Assessment of potential impacts on groundwater quality and proposed water quality management measures as set forth below.

Section 7. Flooding Considerations

A. Minimum Flooding Analysis

Maximum estimated flooding elevations shall be determined for each sinkhole for both pre-development and post development conditions, assuming no subsurface outflow from the sinkhole.

Where the estimated volume of runoff exceeds the volume of the sinkhole depression, the depth, spread and path of overflow shall be estimated and shown on the map.

The overflow volume shall be included determining the maximum estimated flooding elevations in the next downstream sinkhole. This analysis shall continue downstream until the lowest sinkhole of the sinkhole cluster is reached or overflow reaches a surface watercourse.

The volume of runoff considered shall be that which results from a rainstorm with an annual probability of 1% (100-year storm) and a duration of 24 hours (8.2 inches).

The runoff volume shall be determined by the method set forth in Chapter 2 of the SCS TR-55 Manual (Reference).

No Further Flooding Analysis will be Required Provided That:

1. The post-development flooding area of any sinkhole which receives drainage from the site is located entirely on the site.

    a. A drainage easement covering the post-development flooding area is provided for any off-site sinkhole or portion of a sinkhole which receives increased peak rates of runoff from the site. If the receiving sinkhole is not contiguous to the site, an easement must also be provided for the waterway that connects the site to the sinkhole.

2. The minimum entry elevation of any existing structure is at least 5 feet higher than the estimated flooding elevation from the 1% annual probability 24-hour storm.

3. The flooding depth on any existing public road does not exceed the maximum depths set forth in Article 7.

B. Detailed Flooding Analysis

In cases where the conditions set forth above cannot be met, a detailed flooding analysis will be required if any increase in runoff volume is proposed. For detailed flooding analysis a runoff model must be made for the sinkhole watershed and reservoir routing analysis performed using hydrograph techniques as set forth in Article 8

The following alternative methods may be used singly or in combination to keep flooding levels at pre-development levels:

1. Diversion of excess runoff to surface watercourses.

    Where feasible, increased post-development runoff may by diverted to a surface watercourse, provided that

    a. Any increase in peak runoff rate in the receiving watercourse does not create or worsen existing flooding problems downstream; and

    b. The diverted storm water remains in the same surface watershed.

    Storm sewers, open channels and other appurtenances provided for diversions shall be designed in accordance with applicable sections of these Design Criteria.

    The effect of diverted water on downstream watercourses and developments, and requirements for additional detention facilities prior to release of runoff to the surface water course shall be determined as set forth in Article 8, Detention Facilities.

    Effects of the diversion shall be shown by reservoir routing analysis. Routing of excess runoff shall be considered satisfactory when it can be demonstrated that the post-

development flooding elevation in the sinkhole does not exceed the pre-development flooding elevation within reasonable tolerance (generally 0.1 ft.).

2. **Storage of Excess Runoff Within the Sinkhole Watershed**

Where feasible, detention facilities may be constructed within the sinkhole watershed or in perimeter areas of the sinkhole. These detention facilities must be located outside the sinkhole flooding area determined for post-development conditions.

The flooding considerations set forth in this Section will be met if it can be demonstrated that:

a. Inflow rates to the sinkhole can be reduced to a degree that, in conjunction with the observed outflow rate, the post-development flooding elevation in the sinkhole does not exceed the pre-development flooding elevation within reasonable tolerance (generally 0.1 ft.).

3. Sediment & erosion control and water quality considerations as set forth elsewhere in this section can be satisfied.

Section 8. Water Quality Considerations

Sinkholes provide direct recharge routes to groundwater. As a result water quality in wells, caves and springs may be affected by discharge of runoff from developed areas. The Sinkhole Evaluation must consider potential impacts of the proposed construction on receiving groundwater and propose measures to mitigate such impacts.

Four Primary Factors Must be Considered in the Sinkhole Evaluation:

1. Receiving groundwater use.
2. Relative groundwater contamination hazard associated with the proposed development.
3. Ability to capture pollutants.
4. Management measures to be provided to reduce pollutant levels.

A. Receiving Groundwater Use

The Sinkhole Evaluation Report shall identify whether the site lies within a critical area based upon information available from the County.

Where disagreements may arise over whether a site is located within a particular recharge area dye tracing may be required for confirmation of the destination of water discharges through a sinkhole.

1. **Critical Areas**

The following areas are classified as critically sensitive to contamination from urban runoff:

a. Recharge areas of domestic water supply wells.

b. Recharge areas of springs used for public or private water supply.

c. Recharge areas of caves providing habitat to rare or e endangered species such as the Ozark cave fish.

2. **Sensitive Areas**

All other sinkhole areas will be classified as sensitive to contamination from urban runoff.

B. Groundwater Contamination Hazard

The relative potential for groundwater contamination will be classified as moderate, high, or very high depending upon the type of land use, development density and amount of directly connected impervious area. The Sinkhole Evaluation shall identify whether the proposed development poses a moderate, high or very high hazard to groundwater uses, as defined below:

1. **Moderate Hazard**

The following land uses are classified as posing a relatively low hazard to groundwater contamination:

a. Wooded areas and lawns.

b. Parks and recreation areas.

c. Residential developments on sewer, provided directly connected impervious areas discharging to the sinkhole is less than 1 acre.

d. Low density commercial and office developments provided directly connected impervious areas discharging to the sinkhole is less than 1 acre.

e. Discharge from graded areas less than 1 acre having required sediment controls per Article 3.

2. **High Hazard**

a. Concentrated discharge from streets and parking lots and roofs and other directly connected impervious areas having an area greater than 1 Acre and less than 5 acres.

b. Multifamily residential developments and higher intensity office developments provided the directly connected impervious areas discharging to the sinkhole is less than 5 acres.

c. Discharge from graded areas greater than 1 acre and less than 5 acres having required sediment controls per Article 3.

3. **Very High Hazard**

a. Collector and arterial streets and highways used for commercial transport of toxic materials.

b. Railroads.

c. Concentrated discharge from streets and parking lots and roofs and other directly connected impervious areas having an area greater than 5 acres.

d. Commercial, industrial and manufacturing areas.

e. Individual wastewater treatment systems.

f. Commercial feedlots or poultry operations.

g. Discharge from graded areas greater than 5 acres having required sediment controls per Article 3.

C. Capturing and Filtering Pollutants

The majority of sinkholes drain a limited watershed area. For sinkholes where the surrounding drainage area is small enough that the area draining to the sinkhole flows predominantly as "sheet flow", potential impacts on water quality can be addressed by erecting silt control barriers around the sinkhole during construction and providing a vegetative buffer area around the sinkhole to filter out potential contaminants.

When the volume of runoff into the sinkhole increases to the point where flow becomes concentrated, the degree of effort required capturing and filtering out contaminants increases significantly.

Concentrated inflow occurs naturally when the sinkhole watershed area reaches a sufficient size for watercourses leading into the sinkhole to form. Concentrated surface flows result as urbanization occurs due to construction of roads, storm sewers, drainage channels. Subsurface flows can become concentrated through utility trenches.

The Sinkhole Evaluation shall include maps showing any existing watercourse which flows into the sinkhole and location of any proposed concentrated storm water discharges into the sinkhole.

D. Water Quality Management Measures

1. **Sediment and Erosion Control**

a. **Non-Concentrated Flow (Sheet Flow)**

In critical areas, existing ground cover shall not be removed within 30 feet of the sinkhole rim and a silt barrier shall be provided around the outer perimeter of the buffer area.

b. **Concentrated Flow**

A sediment basin will be required at each point where concentrated flows are discharged into the sinkhole.

Sediment basins shall be designed according to the procedures set forth in Article 3.

2. **Minimizing Directly Connected Impervious Area**

The groundwater contamination hazard category for impervious areas may be reduced by reducing the amount of Directly Connected Impervious Area. This is the area of roofs, drives, streets, parking lots, etc. which are connected via paved gutters, channels, or storm sewers.

Directly Connected Impervious Areas can be reduced by providing properly sized grass swales, vegetative filter strips, or other Best Management Practices to separate paved areas.

3. **Diversion of Runoff**

Concentrated discharges to sinkholes can be reduced to manageable levels or avoided by diverting runoff from impervious areas away from sinkholes where possible.

Diversions shall be done in a manner that does not increase flooding hazards on downstream properties and, generally, shall not be directed out of the surface watershed in which the sinkhole is located.

4. **Filtration Areas**

For areas having a moderate or high groundwater contamination hazard and where flow into the sinkhole occurs as sheet flow, water quality requirements can be satisfied by maintaining a permanent vegetative buffer area with a minimum width of 30 feet around the sinkhole.

Use of pesticides and fertilizers will not be permitted within the buffer area. Animal wastes will not be permitted to accumulate in the buffer area.

5. **Grassed Swales and Channels**

For areas having a moderate groundwater contamination hazard concentrated flows from directly connected impervious areas of less than one acre may be discharged into the sinkhole through grassed swales and channels.

Swales and channels shall be designed for non-erosive velocities and appropriate temporary erosion control measures such as sodding or erosion control blankets provided.

6. **Storage and Infiltration**

Storage and infiltration will be required in the following cases:

a. All areas having a **very high** groundwater contamination hazard.

b. Areas having a **high** groundwater contamination hazard where concentrated inflow occurs.

Storage and infiltration basins shall be designed to capture the runoff from storms up to 1 inch and release runoff over a minimum period of 24 hours and maximum period of 48 hrs.

Standards outlet structures for sedimentation and infiltration basins are shown in the standard drawings.

E. **Development Requirements**.

1. **Stormwater Detention in Sinkholes**

Where flooding considerations and water quality considerations, as set forth in Article 3, can be met, the volume of runoff storage in sinkholes can be counted toward storm water detention requirements, provided that proper sediment and erosion control measures are provided as set forth in Article 3.

The volume of required detention storage shall be determined as set forth in Article 8.

Excavation within the sinkhole flooding area to provide additional detention storage will not be allowed.

2. **Modification of Sinkholes to Increase Outflow Rates**

Increasing outflow rates in sinkholes by excavating the sinkhole eye or installing disposal wells for diverting surface runoff to the groundwater system is prohibited, unless clear and imminent danger to the public health and safety can be demonstrated.

3. **Setbacks and Use Restrictions**

a. No new construction of any of the following shall be permitted within 30 feet horizontally of the sinkhole rim:

1. Residential, commercial or industrial structures.
2. Swimming pools.
3. Streets, highways, or parking lots.
4. Storage yards for materials, vehicles, and equipment.
5. Sanitary sewer lines.

b. The finished floor elevation of all structures constructed within a sinkhole rim shall have the finished floor set a minimum of 5 feet above the 100-year water surface elevation as determined in Section G above.

c. Use of pesticides and fertilizers within 30 feet of the sinkhole rim is prohibited.

d. Use of heavy construction equipment in unaltered sinkholes is prohibited.

e. Construction of underground utilities is prohibited within the sinkhole rim.

f. Recreational facilities such as hiking, jogging, and bicycling trails, playgrounds, exercise courses, and grass playing fields are permitted within the sinkhole area provided they are not located within the eye of the sinkhole.

g. Golf courses are permitted subject to approval of a Management Plan for use of pesticides and fertilizers.

h. Clearing and pruning of trees and undergrowth, and limited grubbing of roots is permitted.

i. Landscaping and minor gardening is permitted outside of the sinkhole eye provided erosion and sediment discharge is limited through use of minimum tillage and mulches.

j. Construction of light incidental landscaping and recreational structures such as gazebos, playground equipment, etc. is permitted except in the sinkhole eye.

4. **Collapsed Sinkholes**

Collapsed sinkholes may be stabilized and filled using approved techniques. A Soil Erosion & Control Permit must be issued prior to performing any construction.

The probable cause of the collapse and potential adverse impacts of filling the collapse shall be investigated and information submitted with the permit application.

5. **Altered Sinkholes**

Filling or altering of sinkholes without a Soil Erosion & Control Permit constitutes a violation of these regulations. In such cases corrective measures must be proposed within the time period specified in the Zoning Regulations for enforcement of such violations. No corrective or remedial measures shall be undertaken until the proposed remediation plan has been reviewed by the County and a Permit issued.

No Building Permits will be issued, or zoning or subdivision approvals granted, until the remedial measures specified in the Soil Erosion & Control Permit have been completed and approved.

ARTICLE 10. FLOODPLAIN DEVELOPMENT

Section 1. Purpose

As a participant in the National Flood Insurance Program, Christian County adheres to the requirements of the 1968 Flood Insurance Act and the 1994 Flood Insurance Reform Act. The National Flood Insurance Program (NFIP) is administered by FEMA.

The purpose of the NFIP is to:

A. Significantly limit the number of new structures built below the 100-year flood elevation

B. Provide affordable flood insurance to existing flood prone structures

C. Provide programs to remove or elevate substantially damaged structures and repetitive loss structures

Section 2. Policy

Christian County, through the Floodplain Manager, is responsible for reviewing and ensuring that all development in the floodplain and floodway meets the requirements of the NFIP.

Section 3. Definitions

Flood

Temporary condition of partial or complete inundation of normally dry areas from overflow of inland or tidal waters, rapid accumulation or runoff of surface waters from any source.

SFHA (Special Flood Hazard Area)

Areas subject to a 1% or greater annual chance of flooding in a given year.

BFE (Base Flood Elevation)

The flood elevation from a flood having a 1% probability of being equaled or exceed in any given year.

FIRM (Flood Insurance Rate Map)

Official map of a community on which FEMA has delineated the flood hazard areas.

FIS (Flood Insurance Study)

An engineering study performed under contract to FEMA to identify floodprone areas and to determine BFEs.

Structure

A walled and roofed building, including a gas or liquid storage tank, that is principally above ground.

Floodway

The critical area of the SFHA that must be preserved to allow passage of floods.

Surcharge

The difference in the elevation of the base flood and the floodway water surface elevation at a given point. This value is never more than 1.0 foot.

Fringe

The area of the SFHA between the floodway and the 100-year flooding limits.

Encroachment

Any fill, structures or other obstructions that infringe upon the floodway or floodplain and cause an increase in the BFE.

Section 4. Permits

A floodplain development permit is required for all development or fill activities within the limits of the 100-year floodplain as shown on the FIRM.

Section 5. FEMA

Prior to approval of any development plan, all lots or structures to be located within the floodplain or floodway must meet all NFIP requirements.

A. Approximate Zone A

1. Establishment of BFEs in an approximate Zone A floodplain must conform to the requirements of, The Zone A Manual: Managing Floodplain Development in Approximate Zone A Areas.
2. Based upon the computed BFE, a Letter of Map Amendment or Letter of Map Revision Based upon Fill must be obtained from FEMA for the property and/or structure in question.
3. Encroachment in an approximate Zone A floodplain must produce no more than 1.0 foot of rise in the BFE.

B. Zone AE

1. Based upon the BFEs from the FIRM, a Letter of Map Amendment or a Letter of Map Revision Based upon Fill must be obtained from FEMA for the property and/or structure in question.

2. If mapping errors are found or changes to BFEs are proposed, a Letter of Map Revision must be obtained from FEMA for the floodplain reach impacted.

C. Floodway Development

1. Development causing any obstruction to flow is not allowed within the effective floodway.
2. A No-Rise Certification must be made for all roadway crossings of the floodway.
3. If changes to the floodway are desired, a Letter of Map Revision must be obtained from FEMA for the floodway reach impacted.

APPENDIX A ADOPTED FLOODPLAIN MANAGEMENT ORDINANCE

FLOODPLAIN MANAGEMENT ORDINANCE
60.3(b)
CHRISTIAN COUNTY, MISSOURI

ARTICLE 1 STATUTORY AUTHORIZATION, FINDINGS OF FACT, AND PURPOSES

SECTION A. STATUTORY AUTHORIZATION

The Legislature of the State of Missouri has in RSMO 64.620 delegated the responsibility to local governmental units to adopt floodplain management regulations designed to protect the health, safety, and general welfare. Therefore, the County Commission of Christian County, Missouri ordains as follows:

SECTION B. FINDINGS OF FACT

1. *Flood Losses Resulting from Periodic Inundation*

   The special flood hazard areas of Christian County, Missouri are subject to inundation which results in loss of life and property, health and safety hazards, disruption of commerce and governmental services, extraordinary public expenditures for flood protection and relief, and impairment of the tax base; all of which adversely affect the public health, safety and general welfare.

2. *General Causes of the Flood Losses*

   These flood losses are caused by (1) the cumulative effect of development in any delineated floodplain causing increases in flood heights and velocities; and (2) the occupancy of flood hazard areas by uses vulnerable to floods, hazardous to others, inadequately elevated, or otherwise unprotected from flood damages.

SECTION C. STATEMENT OF PURPOSE

It is the purpose of this ordinance to promote the public health, safety, and general welfare; to minimize those losses described in Article 1, Section B (1); to establish or maintain the community's eligibility for participation in the National Flood Insurance Program (NFIP) as defined in 44 Code of Federal Regulations (CFR) 59.22(a)(3); and to meet the requirements of 44 CFR 60.3(b) by applying the provisions of this ordinance to:

1. restrict or prohibit uses that are dangerous to health, safety, or property in times of flooding or cause undue increases in flood heights or velocities;

2. require uses vulnerable to floods, including public facilities that serve such uses, be provided with flood protection at the time of initial construction; and

3. protect individuals from buying lands that are unsuited for the intended development purposes due to the flood hazard.

ARTICLE 2 GENERAL PROVISIONS

SECTION A. LANDS TO WHICH ORDINANCE APPLIES

This ordinance shall apply to all lands within the jurisdiction of Christian County identified as unnumbered A zones, on the Flood Insurance Rate Map (FIRM) Christian County Index Panel 29043CIND0A dated December 17, 2010, as amended, and any future revisions thereto. In all areas covered by this ordinance, no development shall be permitted except through the issuance of a floodplain development permit, granted by the County Commission or its duly designated representative under such safeguards and restrictions as the County Commission or the designated representative may reasonably impose for the promotion and maintenance of the general welfare, health of the inhabitants of the community, and as specifically noted in Article 4.

SECTION B. FLOODPLAIN ADMINISTRATOR

The Planning and Zoning Administrator is hereby designated as the Floodplain Administrator under this ordinance.

SECTION C. COMPLIANCE

No development located within the special flood hazard areas of this community shall be located, extended, converted, or structurally altered without full compliance with the terms of this ordinance and other applicable regulations.

SECTION D. ABROGATION AND GREATER RESTRICTIONS

It is not intended by this ordinance to repeal, abrogate, or impair any existing easements, covenants, or deed restrictions. However, where this ordinance imposes greater restrictions, the provisions of this ordinance shall prevail. All other ordinances inconsistent with this ordinance are hereby repealed to the extent of the inconsistency only.

SECTION E. INTERPRETATION

In their interpretation and application, the provisions of this ordinance shall be held to be minimum requirements, shall be liberally construed in favor of the governing body, and shall not be deemed a limitation or repeal of any other powers granted by State statutes.

SECTION F. WARNING AND DISCLAIMER OF LIABILITY

The degree of flood protection required by this ordinance is considered reasonable for regulatory purposes and is based on engineering and scientific methods of study. Larger floods may occur on rare occasions or the flood heights may be increased by man-made or natural causes, such as ice jams and bridge openings restricted by debris. This ordinance does not imply that areas outside unnumbered A Zones or land uses permitted within such areas will be free from flooding or flood damage. This ordinance shall not create a liability on the part of Christian County, any officer or employee thereof, for any flood damages that may result from reliance on this ordinance or any administrative decision lawfully made thereunder.

SECTION G. SEVERABILITY

If any section, clause, provision, or portion of this ordinance is adjudged unconstitutional or invalid by a court of appropriate jurisdiction, the remainder of this ordinance shall not be affected thereby.

ARTICLE 3 ADMINISTRATION

SECTION A. FLOODPLAIN DEVELOPMENT PERMIT **(REQUIRED)**

A floodplain development permit shall be required for all proposed construction or other development, including the placement of manufactured homes, in the areas described in Article 2, Section A. No person, firm, corporation, or unit of government shall initiate any development or substantial-improvement or cause the same to be done without first obtaining a separate floodplain development permit for each structure or other development.

SECTION B. DESIGNATION OF FLOODPLAIN ADMINISTRATOR

The Planning and Zoning Administrator is hereby appointed to administer and implement the provisions of this ordinance.

SECTION C. DUTIES AND RESPONSIBILITIES OF FLOODPLAIN ADMINISTRATOR

Duties of the Planning and Zoning Administrator shall include, but not be limited to:

1. review of all applications for floodplain development permits to assure that sites are reasonably safe from flooding and that the floodplain development permit requirements of this ordinance have been satisfied;

2. review of all applications for floodplain development permits for proposed development to assure that all necessary permits have been obtained from Federal, State, or local governmental agencies from which prior approval is required by Federal, State, or local law;

3. review all subdivision proposals and other proposed new development, including manufactured home parks or subdivisions, to determine whether such proposals will be reasonably safe from flooding;

4. issue floodplain development permits for all approved applications;

5. notify adjacent communities and the Missouri State Emergency Management Agency (MO SEMA) prior to any alteration or relocation of a watercourse, and submit evidence of such notification to the Federal Emergency Management Agency (FEMA);

6. assure that the flood carrying capacity is not diminished and shall be maintained within the altered or relocated portion of any watercourse.

[Article 3, Section C(7)]

7. where base flood elevation from other sources is utilized within unnumbered A zones:

   a. verify and maintain a record of the actual elevation (in relation to mean sea level) of the lowest floor (including basement) of all new or substantially improved structures;

   b. verify and maintain a record of the actual elevation (in relation to mean sea level) that the new or substantially improved non-residential structures have been floodproofed;

   c. when floodproofing techniques are utilized for a particular non-residential structure, the Planning and Zoning Administrator shall require certification from a registered professional engineer or architect.

SECTION D. APPLICATION FOR FLOODPLAIN DEVELOPMENT PERMIT

To obtain a floodplain development permit, the applicant shall first file an application in writing on a form furnished for that purpose. Every floodplain development permit application shall:

1. describe the land on which the proposed work is to be done by lot, block and tract, house and street address, or similar description that will readily identify and specifically locate the proposed building or work;

2. identify and describe the work to be covered by the floodplain development permit;

3. indicate the use or occupancy for which the proposed work is intended;

4. indicate the assessed value of the structure and the fair market value of the improvement;

5. identify the existing base flood elevation and the elevation of the proposed development;

6. give such other information as reasonably may be required by the Planning and Zoning Administrator;

7. be accompanied by plans and specifications for proposed construction; and

8. be signed by the permittee or his authorized agent who may be required to submit evidence to indicate such authority.

ARTICLE 4 PROVISIONS FOR FLOOD HAZARD REDUCTION

SECTION A. GENERAL STANDARDS

1. No permit for floodplain development shall be granted for new construction, substantial improvements, and other improvements, including the placement of manufactured homes, within any unnumbered A zone unless the conditions of this section are satisfied.

[Article 4, Section A]

2. All areas identified as unnumbered A zones on the FIRM are subject to inundation of the 100-year flood; however, the base flood elevation is not provided. Development within unnumbered A zones is subject to all provisions of this ordinance. If Flood Insurance Study data is not available, the community shall obtain, review, and reasonably utilize any base flood elevation or floodway data currently available from Federal, State, or other sources.

3. All new construction, subdivision proposals, substantial-improvements, prefabricated buildings, placement of manufactured homes, and other developments shall require:

   a. design or adequate anchorage to prevent flotation, collapse, or lateral movement of the structure resulting from hydrodynamic and hydrostatic loads, including the effects of buoyancy;

   b. construction with materials resistant to flood damage;

   c. utilization of methods and practices that minimize flood damages;

   d. all electrical, heating, ventilation, plumbing, air-conditioning equipment, and other service facilities be designed and/or located so as to prevent water from entering or accumulating within the components during conditions of flooding;

   e. new or replacement water supply systems and/or sanitary sewage systems be designed to minimize or eliminate infiltration of flood waters into the systems and discharges from the systems into flood waters, and on-site waste disposal systems be located so as to avoid impairment or contamination; and

   f. subdivision proposals and other proposed new development, including manufactured home parks or subdivisions, located within special flood hazard areas are required to assure that:

      (1) all such proposals are consistent with the need to minimize flood damage;

      (2) all public utilities and facilities, such as sewer, gas, electrical, and water systems are located and constructed to minimize or eliminate flood damage;

      (3) adequate drainage is provided so as to reduce exposure to flood hazards; and

      (4) all proposals for development, including proposals for manufactured home parks and subdivisions, of five (5) acres or fifty (50) lots, whichever is lesser, include within such proposals base flood elevation data.

4. *Agricultural Structures*

   Structures used solely for agricultural purposes in connection with the production, harvesting, storage, drying, or raising of agricultural commodities, including the raising of livestock, may be constructed at-grade and wet-floodproofed provided there is no human habitation or occupancy of the structure; the structure is of single-wall design; there is no permanent retail, wholesale, or manufacturing use included in the structure; a variance has been granted from the floodplain management requirements of this ordinance; and a floodplain development permit has been issued.

[Article 4, Section A]

5. *Storage, material, and equipment*

   a. The storage or processing of materials within the special flood hazard area that are in time of flooding buoyant, flammable, explosive, or could be injurious to human, animal, or plant life is prohibited.

   b. Storage of other material or equipment may be allowed if not subject to major damage by floods, if firmly anchored to prevent flotation, or if readily removable from the area within the time available after a flood warning.

6. *Accessory Structures*

   Structures used solely for parking and limited storage purposes, not attached to any other structure on the site, of limited investment value, and not larger than 400 square feet, may be constructed at-grade and wet-floodproofed provided there is no human habitation or occupancy of the structure; the structure is of single-wall design; a variance has been granted from the standard floodplain management requirements of this ordinance; and a floodplain development permit has been issued.

SECTION B. SPECIFIC STANDARDS

1. In all areas of special flood hazard, once **base flood elevation** data is obtained, as set forth in Article 4, Section A(2), the following provisions are required:

   a. *Residential Construction*

   New construction or substantial-improvement of any residential structure, including manufactured homes, shall have the lowest floor, including basement, elevated to one (1) foot above base flood level.

*[*The FEMA, Region VII office recommends elevating to one foot above the base flood elevation to accommodate floodway conditions when the floodplain is fully developed.]*

   b. *Non-Residential Construction*

   New construction or substantial-improvement of any commercial, industrial, or other non-residential structure, including manufactured homes, shall have the lowest floor, including basement, elevated to one (1) foot above the base flood level or, together with attendant utility and sanitary facilities, be floodproofed so that below the base flood level the structure is watertight with walls substantially impermeable to the passage of water and with structural components having the capability of resisting hydrostatic and hydrodynamic loads and effects of buoyancy. A registered professional engineer or architect shall certify that the standards of this subsection are satisfied. Such certification shall be provided to the Floodplain Administrator as set forth in Article 3, Section C(7)(c).

*[*The FEMA, Region VII office recommends elevating to one foot above the base flood elevation to qualify for flood insurance rates based upon floodproofing.]*

[Article 4, Section B]

c. Require for all new construction and substantial-improvements that fully enclosed areas below lowest floor used solely for parking of vehicles, building access, or storage in an area other than a basement and that are subject to flooding shall be designed to automatically equalize hydrostatic flood forces on exterior walls by allowing for the entry and exit of floodwaters. Designs for meeting this requirement must either be certified by a registered professional engineer or architect or meet or exceed the following minimum criteria:

(1) A minimum of two openings having a total net area of not less than one square inch for every square foot of enclosed area subject to flooding shall be provided; and

(2) the bottom of all opening shall be no higher than one foot above grade. Openings may be equipped with screens, louvers, valves, or other coverings or devices provided that they permit the automatic entry and exit of floodwaters.

2. In all areas of special flood hazard, once **floodway** data is obtained, as set forth in Article 4, Section A(2), the following provisions are required:

a. The designated floodway shall be based on the standard that the area chosen for the floodway must be designed to carry the waters of the base flood, without increasing the water surface elevation more than one foot at any point; and

b. the community shall prohibit any encroachments, including fill, new construction, substantial improvements, and other development within the designated regulatory floodway unless it has been demonstrated through hydrologic and hydraulic analyses performed in accordance with standard engineering practice that the proposed encroachment would not result in **any** increase in flood levels within the community during the occurrence of the base flood discharge.

SECTION C. MANUFACTURED HOMES

1. All manufactured homes to be placed within special flood hazard areas shall be required to be installed using methods and practices that minimize flood damage. For the purposes of this requirement, manufactured homes must be elevated and anchored to resist flotation, collapse, or lateral movement. Methods of anchoring may include, but are not limited to, use of over-the-top or frame ties to ground anchors.

2. Require manufactured homes that are placed or substantially improved within unnumbered A zones on the community's FIRM on sites:

a. outside of manufactured home park or subdivision;

b. in a new manufactured home park or subdivision;

c. in an expansion to and existing manufactured home park or subdivision; or

d. in an existing manufactured home park or subdivision on which a manufactured home has incurred "substantial-damage" as the result of a flood, be elevated on a permanent foundation such that the lowest floor of the manufactured home is elevated to one (1) foot above the

[Article 4, Section C]

base flood level and be securely attached to an adequately anchored foundation system to resist flotation, collapse, and lateral movement.

3. Require that manufactured homes to be placed or substantially improved on sites in an existing manufactured home park or subdivision within unnumbered A zones on the community's FIRM, that are not subject to the provisions of Article 4, Section C(2) of this ordinance, be elevated so that either:

   a. the lowest floor of the manufactured home is at one (1) foot above the base flood level; or

   b. the manufactured home chassis is supported by reinforced piers or other foundation elements of at least equivalent strength that are no less than thirty-six (36) inches in height above grade and be securely attached to an adequately anchored foundation system to resist flotation, collapse, and lateral movement.

*[*The FEMA, Region VII office recommends elevating to one foot above the base flood elevation to accommodate floodway conditions when the floodplain is fully developed.]*

SECTION D. RECREATIONAL VEHICLES

1. Require that recreational vehicles placed on sites within unnumbered A Zones on the community's FHBM or FIRM either:

   a. be on the site for fewer than 180 consecutive days, **or**

   b. be fully licensed and ready for highway use*; **or**

   c. meet the permitting, elevation, and the anchoring requirements for manufactured homes of this ordinance.

*A recreational vehicle is ready for highway use if it is on its wheels or jacking system, is attached to the site only by quick-disconnect type utilities and security devices, and has no permanently attached additions.

ARTICLE 5 FLOODPLAIN MANAGEMENT VARIANCE PROCEDURES

SECTION A. ESTABLISHMENT OF APPEAL BOARD

The County Board of Zoning Adjustment established by Christian County shall hear and decide appeals and requests for variances from the floodplain management requirements of this ordinance.

SECTION B. RESPONSIBILITY OF APPEAL BOARD

Where an application for a floodplain development permit or request for a variance from the floodplain management regulations is denied by the Planning and Zoning Administrator, the applicant may apply for such floodplain development permit or variance directly to the Appeal Board, as defined in Article 5, Section A.

The County Board of Zoning Adjustment shall hear and decide appeals when it is alleged that there is an error in any requirement, decision, or determination made by the Planning and Zoning Administrator in the enforcement or administration of this ordinance.

SECTION C. FURTHER APPEALS

Any person aggrieved by the decision of the County Board of Zoning Adjustment or any taxpayer may appeal such decision to the Christian County Circuit Court as provided in RSMO 64.660.

SECTION D. FLOODPLAIN MANAGEMENT VARIANCE CRITERIA

In passing upon such applications for variances, the County Commission shall consider all technical data and evaluations, all relevant factors, standards specified in other sections of this ordinance, and the following criteria:

1. the danger to life and property due to flood damage;

2. the danger that materials may be swept onto other lands to the injury of others;

3. the susceptibility of the proposed facility and its contents to flood damage and the effect of such damage on the individual owner;

4. the importance of the services provided by the proposed facility to the community;

5. the necessity to the facility of a waterfront location, where applicable;

6. the availability of alternative locations, not subject to flood damage, for the proposed use;

7. the compatibility of the proposed use with existing and anticipated development;

8. the relationship of the proposed use to the comprehensive plan and floodplain management program for that area;

9. the safety of access to the property in times of flood for ordinary and emergency vehicles;

10. the expected heights, velocity, duration, rate of rise and sediment transport of the flood waters, if applicable, expected at the site; and,

11. the costs of providing governmental services during and after flood conditions including maintenance and repair of public utilities and facilities such as sewer, gas, electrical, and water systems; streets; and bridges.

SECTION E. CONDITIONS FOR APPROVING FLOODPLAIN MANAGEMENT VARIANCES

1. Generally, variances may be issued for new construction and substantial-improvements to be erected on a lot of one-half acre or less in size contiguous to and surrounded by lots with existing structures constructed below the base flood level, providing items 2 through 6 below have been fully considered. As the lot size increases beyond the one-half (½) acre, the technical justification required for issuing the variance increases.

2. Variances may be issued for the reconstruction, rehabilitation, or restoration of structures listed on the National Register of Historic Places, the State Inventory of Historic Places, or local inventory of historic places upon determination provided the proposed activity will not preclude the structure's continued historic designation.

3. Variances shall not be issued within any designated floodway if any increase in flood levels during the base flood discharge would result.

4. Variances shall only be issued upon a determination that the variance is the minimum necessary, considering the flood hazard, to afford relief.

5. Variances shall only be issued upon (a) a showing of good and sufficient cause, (b) a determination that failure to grant the variance would result in exceptional hardship to the applicant, and (c) a determination that the granting of a variance will not result in increased flood heights, additional threats to public safety, extraordinary public expense, create nuisances, cause fraud on or victimization of the public, or conflict with existing local laws or ordinances.

6. A community shall notify the applicant in writing over the signature of a community official that (1) the issuance of a variance to construct a structure below base flood level will result in increased premium rates for flood insurance up to amounts as high as $25.00 for $100.00 of insurance coverage and (2) such construction below the base flood level increases risks to life and property. Such notification shall be maintained with the record of all variance actions as required by this ordinance.

SECTION F. CONDITIONS FOR APPROVING VARIANCES FOR AGRICULTURAL STRUCTURES

Any variance granted for an agricultural structure shall be decided individually based on a case by case analysis of the building's unique circumstances. Variances granted shall meet the following conditions as well as those criteria and conditions set forth in Article 5, Sections D and E of this ordinance.

In order to minimize flood damages during the 100-year flood and the threat to public health and safety, the following conditions shall be included for any variance issued for agricultural structures that are constructed at-grade and wet-floodproofed.

1. All agricultural structures considered for a variance from the floodplain management regulations of this ordinance shall demonstrate that the varied structure is located in wide, expansive floodplain areas and no other alternate location outside of the special flood hazard area exists for the agricultural structure. Residential structures, such as farm houses, cannot be considered agricultural structures.

2. Use of the varied structures must be limited to agricultural purposes in zone A only as identified on the community's Flood Insurance Rate Map (FIRM).

[Article 5, Section F]

3. For any new or substantially damaged agricultural structures, the exterior and interior building components and elements (i.e., foundation, wall framing, exterior and interior finishes, flooring, etc.) below the base flood elevation, must be built with flood-resistant materials in accordance with Article 4, Section A (3)(b) of this ordinance.

4. The agricultural structures must be adequately anchored to prevent flotation, collapse, or lateral movement of the structures in accordance with Article 4, Section A (3)(a) of this ordinance. All of the building's structural components must be capable of resisting specific flood-related forces including hydrostatic, buoyancy, and hydrodynamic and debris impact forces.

5. Any mechanical, electrical, or other utility equipment must be located above the base flood elevation or floodproofed so that they are contained within a watertight, floodproofed enclosure that is capable of resisting damage during flood conditions in accordance with Article 4, Section A (3)(d) of this ordinance.

6. The agricultural structures must meet all National Flood Insurance Program (NFIP) opening requirements. The NFIP requires that enclosure or foundation walls, subject to the 100-year flood, contain openings that will permit the automatic entry and exit of floodwaters in accordance with Article 4, Section B (1)(c) of this ordinance.

7. The agricultural structures must comply with the floodplain management floodway encroachment provisions of Article 4, Section B(2) (b) of this ordinance. No variances may be issued for agricultural structures within any designated floodway, if any increase in flood levels would result during the 100-year flood.

8. Major equipment, machinery, or other contents must be protected from any flood damage.

9. No disaster relief assistance under any program administered by any Federal agency shall be paid for any repair or restoration costs of the agricultural structures.

10. A community shall notify the applicant in writing over the signature of a community official that (1) the issuance of a variance to construct a structure below base flood level will result in increased premium rates for flood insurance up to amounts as high as $25.00 for $100.00 of insurance coverage and (2) such construction below the base flood level increases risks to life and property. Such notification shall be maintained with the record of all variance actions as required by this ordinance.

11. Wet-floodproofing construction techniques must be reviewed and approved by the community and a registered professional engineer or architect prior to the issuance of any floodplain development permit for construction.

SECTION G. CONDITIONS FOR APPROVING VARIANCES FOR ACCESSORY STRUCTURES

Any variance granted for an accessory structure shall be decided individually based on a case by case analysis of the building's unique circumstances. Variances granted shall meet the following conditions as well as those criteria and conditions set forth in Article 5, Sections D and E of this ordinance.

In order to minimize flood damages during the 100-year flood and the threat to public health and safety, the following conditions shall be included for any variance issued for accessory structures that are constructed at-grade and wet-floodproofed.

1. Use of the accessory structures must be solely for parking and limited storage purposes in Zone A only as identified on the community's Flood Insurance Rate Map (FIRM).

[Article 5, Section F]

2. For any new or substantially damaged accessory structures, the exterior and interior building components and elements (i.e., foundation, wall framing, exterior and interior finishes, flooring, etc.) below the base flood elevation, must be built with flood-resistant materials in accordance with Article 4, Section A (3)(b) of this ordinance.

3. The accessory structures must be adequately anchored to prevent flotation, collapse, or lateral movement of the structure in accordance with Article 4, Section A (3)(a) of this ordinance. All of the building's structural components must be capable of resisting specific flood-related forces including hydrostatic, buoyancy, and hydrodynamic and debris impact forces.

4. Any mechanical, electrical, or other utility equipment must be located above the base flood elevation or floodproofed so that they are contained within a watertight, floodproofed enclosure that is capable of resisting damage during flood conditions in accordance with Article 4, Section A (3)(d) of this ordinance.

5. The accessory structures must meet all National Flood Insurance Program (NFIP) opening requirements. The NFIP requires that enclosure or foundation walls, subject to the 100-year flood, contain openings that will permit the automatic entry and exit of floodwaters in accordance with Article 4, Section B (1)(c) of this ordinance.

6. The accessory structures must comply with the floodplain management floodway encroachment provisions of Article 4, Section B (2)(b) of this ordinance. No variances may be issued for accessory structures within any designated floodway, if any increase in flood levels would result during the 100-year flood.

7. Equipment, machinery, or other contents must be protected from any flood damage.

8. No disaster relief assistance under any program administered by any Federal agency shall be paid for any repair or restoration costs of the accessory structures.

9. A community shall notify the applicant in writing over the signature of a community official that (1) the issuance of a variance to construct a structure below base flood level will result in increased premium rates for flood insurance up to amounts as high as $25.00 for $100.00 of insurance coverage and (2) such construction below the base flood level increases risks to life and property. Such notification shall be maintained with the record of all variance actions as required by this ordinance.

10. Wet-floodproofing construction techniques must be reviewed and approved by the community and registered professional engineer or architect prior to the issuance of any floodplain development permit for construction.

ARTICLE 6 PENALTIES FOR VIOLATION

Violation of the provisions of this ordinance or failure to comply with any of its requirements (including violations of conditions and safeguards established in connection with granting of variances) shall constitute a misdemeanor. Any person who violates this ordinance or fails to comply with any of its requirements shall, upon conviction thereof, be fined not more than $500.00, and in addition, shall pay all costs and expenses involved in the case. Each day such violation continues shall be considered a separate offense.

Nothing herein contained shall prevent Christian County or other appropriate authority from taking such other lawful action as is necessary to prevent or remedy any violation.

ARTICLE 7 AMENDMENTS

The regulations, restrictions, and boundaries set forth in this ordinance may from time to time be amended, supplemented, changed, or appealed to reflect any and all changes in the National Flood Disaster Protection Act of 1973, provided, however, that no such action may be taken until after a public hearing in relation thereto, at which parties of interest and citizens shall have an opportunity to be heard. Notice of the time and place of such hearing shall be published in a newspaper of general circulation in Christian County. At least 20 days shall elapse between the date of this publication and the public hearing. A copy of such amendments will be provided to the Region VII office of the Federal Emergency Management Agency (FEMA). The regulations of this ordinance are in compliance with the National Flood Insurance Program (NFIP) regulations.

ARTICLE 8 DEFINITIONS

Unless specifically defined below, words or phrases used in this ordinance shall be interpreted so as to give them the same meaning they have in common usage and to give this ordinance its most reasonable application.

"100-year Flood" *see "base flood."*

"Accessory Structure" means the same as *"appurtenant structure."*

"Actuarial Rates" *see "risk premium rates."*

"Administrator" means the Federal Insurance Administrator.

"Agency" means the Federal Emergency Management Agency (FEMA).

"Agricultural Commodities" means agricultural products and livestock.

"Agricultural Structure" means any structure used exclusively in connection with the production, harvesting, storage, drying, or raising of agricultural commodities.

"Appeal" means a request for review of the Floodplain Administrator's interpretation of any provision of this ordinance or a request for a variance.

"Appurtenant Structure" means a structure that is on the same parcel of property as the principle structure to be insured and the use of which is incidental to the use of the principal structure.

"Area of Special Flood Hazard" is the land in the floodplain within a community subject to a one percent or greater chance of flooding in any given year.

"Base Flood" means the flood having a one percent chance of being equaled or exceeded in any given year.

"Basement" means any area of the building having its floor subgrade (below ground level) on all sides.

"Building" *see "structure."*

"Chief Executive Officer" or "Chief Elected Official" means the official of the community who is charged with the authority to implement and administer laws, ordinances, and regulations for that community.

"Community" means any State or area or political subdivision thereof, which has authority to adopt and enforce floodplain management regulations for the areas within its jurisdiction.

"Development" means any man-made change to improved or unimproved real estate, including but not limited to buildings or other structures, levees, levee systems, mining, dredging, filling, grading, paving, excavation or drilling operations, or storage of equipment or materials.

"Elevated Building" means for insurance purposes, a non-basement building which has its lowest elevated floor raised above ground level by foundation walls, shear walls, posts, piers, pilings, or columns.

"Eligible Community" or "Participating Community" means a community for which the Administrator has authorized the sale of flood insurance under the National Flood Insurance Program (NFIP).

"Existing Construction" means for the purposes of determining rates, structures for which the *"start of construction"* commenced before the effective date of the FIRM or before January 1, 1975, for FIRMs effective before that date. *"existing construction"* may also be referred to as *"existing structures."*

"Existing Manufactured Home Park or Subdivision" means a manufactured home park or subdivision for which the construction of facilities for servicing the lots on which the manufactured homes are to be affixed (including, at a minimum, the installation of utilities, the construction of streets, and either final site grading or the pouring of concrete pads) is completed before the effective date of the floodplain management regulations adopted by a community.

"Expansion to an Existing Manufactured Home Park or Subdivision" means the preparation of additional sites by the construction of facilities for servicing the lots on which the manufactured homes are to be affixed (including the installation of utilities, the construction of streets, and either final site grading or the pouring of concrete pads).

"Flood" or "Flooding" means a general and temporary condition of partial or complete inundation of normally dry land areas from (1) the overflow of inland and/or (2) the unusual and rapid accumulation or runoff of surface waters from any source.

"Flood Hazard Boundary Map (FHBM)" means an official map of a community, issued by the Administrator, where the boundaries of the flood areas having special flood hazards have been designated as (unnumbered or numbered) A zones.

"Flood Insurance Rate Map (FIRM)" means an official map of a community, on which the Administrator has delineated both the special flood hazard areas and the risk premium zones applicable to the community.

"Floodplain" or "Flood-prone Area" means any land area susceptible to being inundated by water from any source *(see "flooding").*

"Floodplain Management" means the operation of an overall program of corrective and preventive measures for reducing flood damage, including but not limited to emergency preparedness plans, flood control works, and floodplain management regulations.

"Floodplain Management Regulations" means zoning ordinances, subdivision regulations, building codes, health regulations, special purpose ordinances (such as floodplain and grading ordinances) and other applications of police power. The term describes such state or local regulations, in any combination thereof, that provide standards for the purpose of flood damage prevention and reduction.

"Floodproofing" means any combination of structural and nonstructural additions, changes, or adjustments to structures that reduce or eliminate flood damage to real estate or improved real property, water and sanitary facilities, or structures and their contents.

"Functionally Dependent Use" means a use that cannot perform its intended purpose unless it is located or carried out in close proximity to water. This term includes only docking facilities and facilities that are necessary for the loading and unloading of cargo or passengers, but does not include long-term storage or related manufacturing facilities.

"Historic Structure" means any structure that is (a) listed individually in the National Register of Historic Places (a listing maintained by the Department of Interior) or preliminarily determined by the Secretary of the Interior as meeting the requirements for individual listing on the National Register; (b) certified or preliminarily determined by the Secretary of the Interior as contributing to the historical significance of a registered historic district or a district preliminarily determined by the Secretary to qualify as a registered historic district; (c) individually listed on a state inventory of historic places in states with historic preservation programs which have been approved by the Secretary of the Interior; or (d) individually listed on a local inventory of historic places in communities with historic preservation programs that have been certified either (1) by an approved state program as determined by the Secretary of the Interior or (2) directly by the Secretary of the Interior in states without approved programs.

"Increased Cost of Compliance" means coverage for expenses that a property owner must incur, above and beyond the cost to repair the physical damage the structure actually sustained from a flooding event, to comply with mitigation requirements of State or local floodplain management ordinances or laws. Acceptable mitigation measures are elevation, floodproofing, relocation, demolition, or any combination thereof.

"Lowest Floor" means the lowest floor of the lowest enclosed area (including basement). An unfinished or flood-resistant enclosure, usable solely for parking of vehicles, building access, or storage, in an area other than a basement area, is not considered a building's lowest floor, **provided** that such enclosure is not built so as to render the structure in violation of the applicable floodproofing design requirements of this ordinance.

"Manufactured Home" means a structure, transportable in one or more sections, that is built on a permanent chassis and is designed for use with or without a permanent foundation when attached to the required utilities. The term *"manufactured home"* **does not include** a *"recreational vehicle."*

"Manufactured Home Park or Subdivision" means a parcel (or contiguous parcels) of land divided into two or more manufactured home lots for rent or sale.

"Map" means the Flood Hazard Boundary Map (FHBM) or the Flood Insurance Rate Map (FIRM) for a community issued by the Federal Emergency Management Agency (FEMA).

"Market Value" or "Fair Market Value" means an estimate of what is fair, economic, just and equitable value under normal local market conditions.

"Mean Sea Level" means, for purposes of the National Flood Insurance Program (NFIP), the National Geodetic Vertical Datum (NGVD) of 1929 or other datum, to which base flood elevations shown on a community's Flood Insurance Rate Map (FIRM) are referenced.

"New Construction" means, for the purposes of determining insurance rates, structures for which the *"start of construction"* commenced on or after the effective date of an initial FIRM or after December 31, 1974, whichever is later, and includes any subsequent improvements to such structures. For

floodplain management purposes, *"new construction"* means structures for which the *"start of construction"* commenced on or after the effective date of the floodplain management regulations adopted by a community and includes any subsequent improvements to such structures.

New Manufactured Home Park or Subdivision" means a manufactured home park or subdivision for which the construction of facilities for servicing the lot on which the manufactured homes are to be affixed (including at a minimum, the installation of utilities, the construction of streets, and either final site grading or the pouring of concrete pads) is completed on or after the effective date of floodplain management regulations adopted by the community.

"(NFIP)" means the National Flood Insurance Program (NFIP).

"Participating Community" also known as an *"eligible community,"* means a community in which the Administrator has authorized the sale of flood insurance.

"Person" includes any individual or group of individuals, corporation, partnership, association, or any other entity, including Federal, State, and local governments and agencies.

"Principally Above Ground" means that at least 51 percent of the actual cash value of the structure, less land value, is above ground.

"Recreational Vehicle" means a vehicle which is (a) built on a single chassis; (b) 400 square feet or less when measured at the largest horizontal projections; (c) designed to be self-propelled or permanently towable by a light- duty truck; and (d) designed primarily not for use as a permanent dwelling but as temporary living quarters for recreational, camping, travel, or seasonal use.

"Remedy A Violation" means to bring the structure or other development into compliance with Federal, State, or local floodplain management regulations; or, if this is not possible, to reduce the impacts of its noncompliance.

"Repetitive Loss" means flood-related damages sustained by a structure on two separate occasions during a 10-year period for which the cost of repairs at the time of each such flood event, equals or exceeds twenty-five percent of the market value of the structure before the damage occurred.

"Risk Premium Rates" means those rates established by the Administrator pursuant to individual community studies and investigations which are undertaken to provide flood insurance in accordance with Section 1307 of the National Flood Disaster Protection Act of 1973 and the accepted actuarial principles. *"Risk premium rates"* include provisions for operating costs and allowances.

"Special Flood Hazard Area" *see "area of special flood hazard."*

"Special Hazard Area" means an area having special flood hazards and shown on an FHBM or FIRM as zones (unnumbered or numbered) A, AO, AE, or AH.

"Start of Construction" includes substantial-improvements, and means the date the building permit was issued, provided the actual start of construction, repair, reconstruction, rehabilitation, addition placement, or other improvements were within 180 days of the permit date. The ***actual start*** means either the first placement of permanent construction of a structure on a site, such as the pouring of slabs or footings, the installation of piles, the construction of columns, any work beyond the stage of excavation, or the placement of a manufactured home on a foundation. Permanent construction does not

include land preparation, such as clearing, grading and filling, the installation of streets and/or walkways, excavation for a basement, footings, piers, foundations, the erection of temporary forms, nor installation on the property of accessory buildings, such as garages or sheds not occupied as dwelling units or not part of the main structure. For a substantial-improvement, the ***actual start of construction*** means the first alteration of any wall, ceiling, floor, or other structural part of a building, whether or not that alteration affects the external dimensions of the building.

"State Coordinating Agency" means that agency of the state government, or other office designated by the governor of the state or by state statute at the request of the Administrator to assist in the implementation of the National Flood Insurance Program (NFIP) in that state.

"Structure" means, for floodplain management purposes, a walled and roofed building, including a gas or liquid storage tank, that is principally above ground, as well as a manufactured home. *"Structure"* for insurance purposes, means a walled and roofed building, other than a gas or liquid storage tank that is principally above ground and affixed to a permanent site, as well as a manufactured home on a permanent foundation. For the latter purpose, the term includes a building while in the course of construction, alteration or repair, but does not include building materials or supplies intended for use in such construction, alteration or repair, unless such materials or supplies are within an enclosed building on the premises.

"Substantial-Damage" means damage of any origin sustained by a structure whereby the cost of restoring the structure to its before damaged condition would equal or exceed 50 percent of the market value of the structure before the damage occurred. The term includes Repetitive Loss buildings (see definition).

For the purposes of this definition, "repair" is considered to occur when the first repair or reconstruction of any wall, ceiling, floor, or other structural part of the building commences.

The term does not apply to:

a.) Any project for improvement of a building required to comply with existing health, sanitary, or safety code specifications which have been identified by the Code Enforcement Official and which are solely necessary to assure safe living conditions, or

b.) Any alteration of a "historic structure" provided that the alteration will not preclude the structure's continued designation as a "historic structure", or

c.) Any improvement to a building.

Substantial Improvement means any combination of reconstruction, alteration, or improvement to a building, taking place during the life of the building, in which the cumulative percentage of improvement equals or exceeds fifty percent of the current market value of the building. For the purposes of this definition, an improvement occurs when the first alteration of any wall, ceiling, floor, or other structural part of the building commences, whether or not that alteration affects the external dimensions of the building. This term includes structures, which have incurred "repetitive loss" or "substantial damage", regardless of the actual repair work done.

The term does not apply to:

a.) any project for improvement of a building required to comply with existing health, sanitary, or safety code specifications which have been identified by the Code Enforcement Official and which are solely necessary to assure safe living conditions, or

b.) Any alteration of a "historic structure" provided that the alteration will not preclude the structure's continued designation as a "historic structure." Or

c.) Any building that has been damaged from any source or is categorized as repetitive loss.

Substantially improved existing manufactured home parks or subdivisions is where the repair, reconstruction, rehabilitation or improvement of the streets, utilities and pads equals or exceeds 50 percent of the value of the streets, utilities and pads before the repair, reconstruction or improvement commenced.

"Variance" means a grant of relief by the community from the terms of a floodplain management regulation. Flood insurance requirements remain in place for any varied use or structure and cannot be varied by the community.

"Violation" means the failure of a structure or other development to be fully compliant with the community's floodplain management regulations. A structure or other development without the elevation certificate, other certifications, or other evidence of compliance required by this ordinance is presumed to be in violation until such time as that documentation is provided.

ARTICLE 9 CERTIFICATE OF ADOPTION

This Floodplain Management Ordinance for the County Commission of Christian County, Missouri.

ADOPTED AND APPROVED by the County Commission of Christian County, Missouri.

This 29th day of November , 2010.

John Grubaugh
Christian County Presiding Commissioner

ATTEST:

Kay Brown, Christian County Clerk

CHRISTIAN COUNTY COMMISSION
AN ORDER REGULATING
ILLICIT DISCHARGE AND ILLEGAL CONNECTION TO STORM DRAINAGE SYSTEMS AND PROVIDING PENALTIES

Authority: Section 192.300. The county commissions and the county health center boards of the several counties may make and promulgate orders, ordinances, rules or regulations, respectively as will tend to enhance the public health and prevent the entrance of infectious, contagious, communicable or dangerous diseases into such county, but any orders, ordinances, rules or regulations shall not be in conflict with any rules or regulations authorized and made by the department of health and senior services in accordance with this chapter or by the department of social services under chapter 198. The county commissions and the county health center boards of the several counties may establish reasonable fees to pay for any costs incurred in carrying out such orders, ordinances, rules or regulations, however, the establishment of such fees shall not deny personal health services to those individuals who are unable to pay such fees or impede the prevention or control of communicable disease.

Section 1: Purpose and Intent

The purpose of this chapter is to protect the public health, safety, environment, and general welfare through the regulation of Non-Stormwater Discharges to the County's Separate Storm Sewer System or into any Waters of the United States to the maximum extent practicable as required by federal law. This chapter establishes methods for controlling the introduction of Pollutants into the County's Separate Storm Sewer System in order to comply with requirement of the National Pollutant Discharge Elimination System (NPDES) permit process. The objectives of this chapter are to:

a. Regulate the contribution of Pollutants to the County's Separate Storm Sewer System or into any Waters of the United States by any Person;
b. Prohibit Illicit Discharges and Illegal Connections to the County's Separate Storm Sewer System or into any Waters of the United States;
c. Prevent Non-Stormwater Discharges, generated as a result of spills, inappropriate dumping, or disposal, into the County's Separate Storm Sewer System or into any Waters of the United States;
d. To establish legal authority to carry out all inspection, surveillance, monitoring and enforcement procedures necessary to ensure compliance with this ordinance.

Section 2: Applicability

The provisions of this chapter shall apply throughout the unincorporated area of Christian County.

Section 3: Compatibility with Other Regulations

This chapter is not intended to modify or repeal any other ordinance, rule, regulation, or other provision of law. The requirements of this chapter are in addition to the requirements of any other ordinance, rule, regulation, or other provision of law, and where any provision of this chapter imposes restrictions different from those imposed by any other chapter, rule, regulation, or other provision of law, whichever provision is more restrictive or imposes higher protective standards for human health or the environment shall control.

Section 4: Responsibility for Administration

.
The County's Director of Planning and Development or designee shall administer, implement, and enforce the provisions of this chapter.

Section 5: Definitions

As used in this chapter the following words and phrases having the meanings indicated:

Accidental Discharge means a discharge prohibited by this chapter which occurs by chance and without planning or thought prior to occurrence.

Clean Water Act means the Federal Water Pollution Control Act (33 U.S.C. § 1251 et seq.), and any subsequent amendments thereto.

Construction Activity means activities subject to the Christian County Erosion and Sedimentation Control Ordinance or NPDES General Construction Permits.
These include construction projects resulting in land disturbance. Such activities include but are not limited to clearing and grubbing, grading, excavating, and demolition.

County means Christian County, Missouri.

Director means the Director of Planning and Development or his/her designated agent.

Illicit Discharge means any direct or indirect Non-Stormwater Discharge to the County's Separate Storm Sewer System, except as exempted by this chapter.

Illegal Connection means either of the following: a) any pipe, open channel, drain, or conveyance, whether on the surface or subsurface, which allows an Illicit Discharge to enter the storm drain system including, but not limited to, any conveyance which allows any Non-Stormwater Discharge, including sewage, processed wastewater, and wash water, to enter the storm drain system, regardless of whether such pipe, open channel, drain, or conveyance has been previously allowed, permitted, or approved by an authorized enforcement agency; or b) any pipe, open channel, drain, or conveyance connected to the
County's Separate Storm Sewer System which has not been documented in plans, maps, or equivalent records and approved by an authorized enforcement agency.

Industrial Activity means activities subject to NPDES Industrial Permits as defined in 40 CFR, Section 122.26 (b) (14).

County's Separate Storm Sewer System means any facility in unincorporated Christian County, Missouri, designed or used for collecting and/or conveying Stormwater, including but not limited to any roads with drainage systems, highways, streets, curbs, gutters, inlets, catch basins, piped storm drains, pumping facilities, Structural Stormwater Controls, ditches, swales, natural and man-made or altered drainage channels, reservoirs, and other drainage structures, and which are: a) owned or maintained by Christian County; b) not a combined sewer; and c) not part of a publicly-owned treatment works.

National Pollutant Discharge Elimination System (NPDES) Stormwater Discharge Permit means a permit issued by the Missouri Department of Natural Resources under authority delegated pursuant to 33 USC § 1342 (b) that authorizes the discharge of Pollutants into Waters of the United States, whether the permit is applicable on an individual, group, or general area-wide basis.

Non-Stormwater Discharge means any discharge to the storm drain system that is not composed entirely of Stormwater.

Person means, except to the extent exempted from this chapter, any individual, partnership, firm, association, joint venture, public or private corporation, trust, estate, commission, board, public or private institution, utility, cooperative, city, county, or other political subdivision of the State of Missouri, any interstate body, or any other legal entity.

Pollutant means anything which causes or contributes to Pollution. Pollutants may include, but are not limited to: paints, varnishes, and solvents; petroleum hydrocarbons; automotive fluids; cooking grease; detergents (biodegradable or otherwise); degreasers; cleaning chemicals; non-hazardous liquid and solid wastes and yard wastes; refuse, rubbish, garbage, litter, or other discarded or abandoned objects and accumulations, so that same may cause or contribute to Pollution; floatables; pesticides, herbicides, and fertilizers; liquid and solid wastes; wastes and residues that result from constructing a building or structure; concrete and cement; and noxious or offensive matter of any kind.

Pollution means the contamination or other alteration of any water's physical, chemical, or biological properties by the addition of any constituent and includes, but is not limited to, a change in temperature, taste, color, turbidity, or odor of such waters, or the discharge of any liquid, gaseous, solid, radioactive, or other substance into any such waters as will or is likely to create a nuisance or render such waters harmful, detrimental, or injurious to the public health, safety, welfare, or environment, or to domestic, commercial, industrial, agricultural, recreational, or other legitimate beneficial uses, or to livestock, wild animals, birds, or fish or other aquatic life.

Premises means any building, lot, parcel of land, or portion of land, whether improved or unimproved, including adjacent sidewalks and parking strips.

Stormwater Runoff or Stormwater means any surface flow, runoff, or drainage consisting entirely of water from any form of natural precipitation, and resulting from such precipitation.

Structural Stormwater Control means a structural Stormwater management facility or device that controls Stormwater Runoff and changes the characteristics of that runoff including, but not limited to, the quantity and quality, the period of release, or the velocity of flow.

Waters of the United States means any and all rivers, streams, creeks, branches, lakes, reservoirs, ponds, drainage systems, springs, wells, and other bodies of surface and subsurface water, natural or artificial, lying within or forming a part of the boundaries of the State of Missouri which are not entirely confined and retained completely upon the property of a single person.

Section 6: Prohibition of Illicit Discharges

No Person shall throw, drain, or otherwise discharge, cause, or allow others under that Person's control to throw, drain, or otherwise discharge into the County's Separate Storm Sewer System or into any Waters of the United States, any Pollutants or waters containing any Pollutants, other than Stormwater.

Section 7: Exemption

The following discharges are exempt from the prohibition contained in this section:

a. Water line flushing performed by a government agency, other potable water sources, landscape irrigation or lawn watering non-commercial or fundraising car washing, powerwashing on private property, discharges from swimming pools, diverted stream flows, rising groundwater, groundwater infiltration to storm drains, uncontaminated pumped groundwater, foundation or footing drains (not including active groundwater dewatering systems), crawl space pumps, air conditioning condensation, springs, natural riparian habitat or wetland flows, and any other water source not containing Pollutants;
b. Discharges for agricultural use, to include crop planting and cultivation, vegetative renewal, and flushing of animal wastes.
c. Discharges or flows from firefighting, and other discharges specified in writing by the Director or designee as being necessary to protect public health and safety; and,
d. Any Non-Stormwater Discharges permitted under an NPDES Permit or order issued to dischargee and administered under the authority of the State of Missouri, or the Federal Environmental Protection Agency, provided that the dischargee is in full compliance with all requirements of the permit, waiver, or order, and other applicable laws and regulations, and provided that written approval has been granted for any discharge to the County's Separate Storm Sewer System or into any Waters of the United States.

Section 8: Prohibition of Illegal Connections

It shall be unlawful for any Person to construct, use, or maintain any connection to the County's Separate Storm Sewer System or into any Waters of the United States, except in strict compliance with this ordinance.

Section 9: Includes Post Connection

The prohibition of this section expressly includes, without limitation, Illegal Connections made in the past, regardless of whether the connection was permissible under law or practices applicable or prevailing at the time of connection.

Section 10: Sewage Lines

A Person violates this chapter if that Person connects a line conveying sewage to the County's Separate Storm Sewer System or into any Waters of the United States, or allows such a connection to continue.

Section 11: Disconnection Required

Illegal Connections in violation of this chapter must be disconnected and redirected, if necessary, to an approved onsite wastewater management system or the sanitary sewer system as approved by the Director.

Section 12: Drains

Any drain or conveyance that has not been documented in plans, maps, or the equivalent, and which may be connected to the Storm Sewer System, shall be located by the owner or occupant of the Premise in question upon receipt of written notice of violation from the Director or designee requiring that such locating be completed. Such notice will specify a reasonable time period within which the location of the drain or conveyance is to be completed, that the drain or conveyance be identified as storm sewer, sanitary sewer, or other, and that the outfall location or point of connection to the Storm Sewer System, sanitary sewer system, or other discharge point be identified. Results of these investigations are to be documented and provided to the Director.

Section 13: Industrial or Construction Activity Discharges

Each Person subject to an industrial or construction activity NPDES Stormwater Discharge permit shall comply with all provisions of such permit. Proof of compliance with said Permit may be required in a form acceptable to the Director or designee prior to allowing discharges to the County's Separate Storm Sewer System or into any Waters of the United States.

Section 14: Access and Inspection of Premises and Facilities

The Director or designee may enter and inspect Premises and facilities at reasonable times as may be necessary to determine compliance with this ordinance.

Section 15: Allow Access

The owner or operator of a Premise shall allow the Director or designee ready access to all parts of the Premises for the purposes of inspection, sampling, photography, videotaping, examination

or copying of any records that are required under the conditions of an NPDES Permit to discharge Stormwater.

Section 16: Monitoring Services, Director

The Director or designee shall have the right to set up on any Premises or facility such devices as are necessary in the opinion of the Director or designee to conduct monitoring and/or sampling of flow discharges.

Section 17: Maintaining Equipment, Owner's Responsibility

The Director or designee may require the owners or operator of a Premise to install monitoring equipment and perform monitoring as necessary, and make the monitoring data available to the Director or designee. This sampling and monitoring equipment shall be maintained at all times in a safe and proper operating condition by the owner or operator at his/her own expense. All devices used to measure flow and utility shall be calibrated to ensure their accuracy.

Section 18: Search Warrant

If the Director or designee has been refused access to any part of the premises from which stormwater is discharged, and the Director or designee is able to demonstrate probable cause to believe that there may be a violation of this chapter, or that there is a need to inspect and/or sample as part of a routine inspection and sampling program designed to verify compliance with this chapter or any order issued hereunder, or to protect the overall public health, safety, environment, and welfare of the community, then the Director or designee may seek issuance of a search warrant from the appropriate court.

Section 19: Notification of Accidental Discharges and Spills

Notwithstanding other requirement of law, as soon as any Person responsible for a facility, activity, or operation, or responsible for emergency response for a facility, activity or operation has information of any known or suspected release of Pollutants or Non-Stormwater Discharges from that facility or operation which are resulting or may result in Illicit Discharges or Pollutants discharging into Stormwater, the County's Separate Storm Sewer System, state waters, or Waters of the United States, said Person shall take all necessary steps to ensure the discovery, containment, and cleanup of such release so as to minimize the effects of the discharge. Said Person shall notify the Public Works Department in person, by phone or by facsimile no later than twenty-four hours after the incident of the nature, quantity, and time of occurrence of the discharge. Notifications in person or by phone shall be confirmed by written notice addressed and mailed to the Director or designee within three business days of the phone call or by personal notification. If the discharge of prohibited materials emanates from a commercial or industrial establishment, the owner or operator of such establishment shall also retain an onsite written record of the discharge and the actions taken to prevent its recurrence. Such records shall be retained for at least three years. Said Person shall also take immediate steps to ensure no recurrence of the discharge or spill. In the event of a release of hazardous materials, the responsible Person shall immediately notify emergency response agencies and/or other

appropriate agencies. Failure to provide notification of a release as provided above is a violation of this ordinance.

Section 20: Violations

It shall be unlawful for any Person to violate any provision or fail to comply with any of the requirements of this chapter. Any Person who has violated or continues to violate any provision of this chapter, may be subject to the enforcement actions outlined in this chapter or may be restrained by injunction or otherwise abated in a manner provided by law. In the event the violation constitutes an immediate danger to public health or safety, the Director or designee is authorized to enter upon the subject Premises, without giving prior notice, to take any and all measures necessary to abate the violation and/or restore the Premises. The Director or designee is authorized to seek costs of the abatement.

Section 21: Notice of Violation

Whenever the Director or designee finds that a violation of this ordinance has occurred, the Director or designee may order compliance by written notice of violation.

Section 22: Delivery, Contents

The notice of violation shall be sent via regular U.S. mail or via hand delivery to the owner of the Premises as shown by Christian County official records, and shall contain:

a. The name and address of the parties listed above;

b. The address, when available, or a description of the building, structure, or land upon which the violation is occurring, or has occurred;

c. A statement specifying the nature of the violation;

d. A description of the remedial measures necessary to restore compliance with this ordinance and a time schedule for the completion of such remedial action;

e. A statement of the penalty or penalties that shall or may be assessed against the Person or Persons to whom the notice of violation is directed; and,

f. A statement that the determination of violation may be appealed to the Director or designee by filing a written notice of appeal within thirty (30) days of service of the notice of violation.

Section 23: Notice, Additional Requirements

Such notice may require without limitation:

a. The performance of monitoring, analyses, and reporting;
b. The elimination of Illicit Discharges and Illegal Connections;

c. That violation discharges, practices, or operations cease and desist;
d. The abatement or remediation of Stormwater Pollution or contamination hazards and the restoration of any affected Premises;
e. Payment of costs to cover administrative and abatement expenses; and,
f. The implementation of Pollution prevention practices.

Section 24: Appeal of Notice of Violation

Any person receiving a notice of violation may appeal the determination of the Director or designee. The notice of appeal must be received within thirty (30) days from the date of the notice of violation. A hearing on the appeal before the Director or designee, shall take place within fifteen days from the date of receipt of the notice of appeal. The decision of the Director or designee shall be final.

Section 25: Enforcement Measures After Appeal

If the violation has not been corrected pursuant to the requirements set forth in the notice of violation, or in the event of an appeal, within fifteen (15) days of the decision of the Director or designee, then the Director or designee may enter upon the subject's Premises and is authorized to take any and all measures necessary to abate the violation and/or restore the Premises. The Director may further issue to the property owner a General Ordinance Summons. It shall be unlawful for any Person, owner, agent, or Person in possession of any Premises to refuse to allow the County or designated County contractor to enter upon the Premises for the purposes set forth above.

Section 26: Costs of Abatement of the Violation

Within thirty (30) days after abatement of a violation by the County the Director or designee will bill the owner of the Premises for the cost of abatement, including administrative costs. If within thirty (30) days after receiving the payment request, the owner has not made payment, the charges shall become a special assessment against the Premises and shall constitute a lien on the Premises for the amount of the assessment.

Section 27: Criminal Penalties

For violation of this chapter, the Director or designee may issue a citation to the alleged violator requiring such Person to appear in the County Court to answer charges for such violation. Upon conviction, such Person shall be punished by a fine not to exceed $1,000.00. Each act of violation and each day upon which any violation shall occur shall constitute a separate offense.

Section 28: Violation Deemed a Public Nuisance

In addition to the enforcement processes and penalties provided, any condition caused or permitted to exist in violation of any of the provisions of this chapter is a threat to the public health, safety, welfare, and environment and is declared and deemed a nuisance, and may be abated by injunctive or other equitable relief as provided by law.

Section 29: Remedies Not Exclusive

The remedies listed in this chapter are not exclusive of any other remedies available under any applicable Federal, State or local law and the Director or designee may seek cumulative remedies. The Director or designee may recover attorney's fees, court costs, and other expenses associated with enforcement of this ordinance, including sampling and monitoring expenses.

Section 30: Variances from Requirements

The Director may grant a variance from requirements of this chapter if exceptional circumstances exist, such that strict adherence to the provisions of this ordinance will not fulfill the intent of this ordinance.

Section 31: Written Application Required

A written application for a variance shall be required and shall state the specific variance sought and the reasons, with supporting data, why a variance should be granted. The request shall include all information necessary to evaluate the proposed variance.

Section 32: Review

The Director will conduct a review of the request for a variance and may approve, deny, or request additional information concerning the variance request.

CHRISTIAN COUNTY, MISSOURI

DATED: 10-31-11

Lou Lapaglia, Presiding Commissioner

DATED: 10-31-11

Bill Barnett, Western Commissioner

DATED: _____

ABSENT

Tom Huff, Eastern Commissioner

COUNTY CLERK:

Kay Brown

APPROVED AS TO FORM:

John W. Housley, County Counselor

REFERENCES

1. Urban Storm Drainage Criteria Manual, Denver Regional Council of Governments, Denver, Colorado, 1984.

2. HEC-2 Water Surface Profiles, Computer Program, The Hydrologic Engineering Center, U.S. Army Corps of Engineers, Davis, California.

3. Davis, C. V. and K. E. Sorenson, Handbook of Applied Hydraulics, McGraw-Hill Book Company, New York, New York, 1969.

4. Federal Highway Administration, "Hydraulic Design of Highway Culverts", U.S. Department of Transportation, 1985.

5. Federal Highway Administration, "Drainage of Highway Pavements", Hydrologic Engineering Circular 12, (HEC-12), U.S. Department of Transportation, 1984.

6. Design and Construction of Sanitary and Storm Sewers, ASCE Manual of Engineering Practice No. 37, New York, New York, 1958.

7. Chow, V.T., Open Channel Hydraulics, McGraw-Hill Book Co., New York, New York, 1964.

8. Chow, V.T., Ed., "Handbook of Applied Hydrology", McGraw-Hill Book Co., New York, New York, 1964.

9. Frederick, R.H., V.A. Myers and E.P. Auciello, "Five to 60-minute Precipitation Frequency for the Eastern and Central United States", NOAA Technical Memorandum NWS HYDRO-35, National Oceanic and Atmospheric Administration, National Weather Service, Office of Hydrology, Silver Spring, Maryland, 1977.

10. Handbook of Steel Drainage and Highway Construction Products, American Iron and Steel Institute, Washington, D.C., 1985.

11. U.S. Department of Agriculture, "Urban Hydrology for Small Watersheds", Technical Release No. 55, U.S. Soil Conservation Service, Washington, D.C., 1986.

12. Meyer, J.M., S.H. Anderson, H.L. Miller and P. Van Handel, "Inlet Grate Capacities", Neenah Foundry Company, Neenah, Wisconsin, 1987.

13. Standard Specifications for Highway Bridges, American Association of State Highway and Transportation Officials, Washington, D.C., 1990.

14. Federal Highway Administration, "Hydraulics of Bridge Waterways", U.S. Department of Transportation, 1978.

15. Federal Highway Administration, "User's Manual for WSPRO - A Computer Model for Water Surface Profiles", U.S. Department of Transportation, 1990.

16. French, R.H., Open Channel Hydraulics, McGraw-Hill Book Co., New York, New York, 1985.

17. Missouri Standard Specifications for Highway Construction, Missouri Highway and Transportation Commission, Jefferson City, Missouri, 1990.

18. U.S. Army Corps of Engineers, "HEC-1 Flood Hydrograph Package", Computer Program 723-X6-L2010, U.S. Army Corps of Engineers, Hydrologic Engineering Center, Davis, CA, September 1990.

19. Hershfield, D.M., "Rainfall Frequency Atlas of the U.S. of Durations from 30 Minutes to 24 Hours and Return Periods from 1-100 Years", U.S. Weather Bureau Technical Paper No. 40, Washington, D.C., 1961.

20. Pilgrim, D.H. and Cordery, I., "Rainfall Temporal Patterns for Design Floods", Journal of the Hydraulic Division, ASCE, Vol. 101, No. HY1, Proc. Paper 1057, Jan., 1975, pp. 81-95.

21. Wilson, J.P., "Regional Applicability of Synthetic Rainfall Distributions for Hydrologic Modeling", Thesis, University of Missouri-Rolla, Rolla, Missouri, 1992.

22. U.S. Department of Agriculture, "Soil Survey of Christian County, Missouri", U.S. Soil Conservation Service, Washington, D.C., 1972.

23. Huff, Floyd A. and Angel, James R., "Rainfall Frequency Atlas of the Midwest", Midwestern Climate Center & Illinois State Water Survey, Bulletin 71, Champaign, IL, 1992.

IT IS FURTHER ORDERED that the Stormwater and Erosion Control Regulations for Christian County, Missouri provide penalties for the violation of the requirements established within said Regulations.

IT IS FURTHER ORDERED that the Stormwater and Erosion Control Regulations for Christian County are authorized to be amended from time to time by Order of the Christian County Commission.

IT IS FURTHER ORDERED that the Stormwater and Erosion Control Regulations for Christian County, Missouri shall become effective on 9th day of Aug, 2010, the same effective date as the Zoning Regulations for Christian County, Missouri and a copy of this Order shall be filed in the office of the County Clerk before 5:00 p.m. this date.

Done this 8th day of July, 2010, at 11:16 0'clock a.m.

CHRISTIAN COUNTY COMMISSION

John Grubaugh
Presiding Commissioner

Yes X
Dated: 7-8-10

Tom Huff
Commissioner, Eastern District

Yes ✓
Dated: 7-8-10

Bill Barnett
Commissioner, Western District

Yes X
Dated: 7-8-10

ATTEST:

Kay Blom
County Clerk

23385-000\ 383506.doc